# CHAPTER 3

# ENGINEERING DESIGN and DEVELOPMENT STANDARDS

**September 1999**
Revised January 2017

**Prepared by:**

**City of Marysville**
**Public Works / Community Development**

## CONTENTS


**GENERAL CONSIDERATIONS** ..... **1**
3-100 SHORTENED DESIGNATION ..... 1
3-101 APPLICABILITY ..... 1
3-102 RESPONSIBILITY TO PROVIDE ROADWAY IMPROVEMENTS ..... 1
3-103 GENERAL REFERENCES ..... 2
3-104 WSDOT/APWA DOCUMENTS AS PRIMARY DESIGN AND CONSTRUCTION REFERENCES ..... 2
3-105 OTHER SPECIFICATIONS ..... 3
3-106 ROAD PLANS ..... 4
3-107 PENALTIES AND FINANCIAL GUARANTEES ..... 5
3-108 SEVERABILITY ..... 5
**ROAD TYPES AND GEOMETRY** ..... **6**
3-200 ROAD CLASSIFICATIONS ..... 6
3-201 ARTERIAL ROADS ..... 6
3-202 RESIDENTIAL ACCESS STREETS ..... 8
3-203 COMMERCIAL ACCESS STREETS[1] ..... 10
3-204 ARTERIAL HORIZONTAL CURVATURE AND SIGHT DISTANCE DESIGN VALUES ..... 10
3-205 PRIVATE STREETS ..... 11
3-206 HALF STREETS ..... 13
3-207 CUL-DE-SACS AND EYEBROWS ..... 14
3-208 ALLEYS ..... 15
3-209 INTERSECTIONS ..... 16
3-210 MAXIMUM GRADE AND GRADE TRANSITIONS ..... 17
3-211 STOPPING SIGHT DISTANCE (SSD) ..... 17
3-212 ENTERING SIGHT DISTANCE (ESD) ..... 18
3-213 ONE-WAY STREETS ..... 19
3-214 INTERSECTIONS WITH STATE OR FEDERAL HIGHWAYS ..... 19
3-215 ROAD CIRCULATION ..... 19
3-216 EXCEPTION FOR MAXIMUM DWELLING UNITS ON NEIGHBORHOOD COLLECTOR ..... 21
3-217 CHANNELIZATION PLAN ..... 21
3-218 PLANNED RESIDENTIAL DEVELOPMENT (PRD) ACCESS STREETS ..... 21
3-219 AUTOCOURTS ..... 22
**SITE ACCESS** ..... **24**
3-300 GENERAL ..... 24
3-301 ARTERIAL ACCESS STANDARD ..... 25
3-302 NON-ARTERIAL ACCESS STANDARDS ..... 28
3-303 DRIVEWAYS ..... 29
3-304 NUMBER OF ACCESS POINTS ..... 32
3-305 VERTICAL ALIGNMENT OF ACCESS POINT ..... 33
3-306 SIGHT DISTANCE ..... 33
3-307 ACCESS AND CIRCULATION REQUIREMENTS ..... 33
3-308 CONSTRUCTION OF ACCESS POINTS ..... 33
**SURFACING** ..... **35**
3-400 SURFACING ..... 35
3-401 RESIDENTIAL STREETS, DRIVEWAYS, PEDESTRIAN AND BIKE FACILITIES ..... 35
3-402 REQUIREMENTS FOR RESIDENTIAL STREETS ON POOR SUB-GRADE ..... 36
3-403 ARTERIALS AND COMMERCIAL ACCESS STREETS ..... 37
3-404 MATERIALS & LAY-DOWN PROCEDURES ..... 37
3-405 CONSTRUCTION CONTROL IN DEVELOPMENTS ..... 38
3-406 PAVEMENT MARKINGS, MARKERS, PAVEMENT TAPERS, AND SIGNAGE ..... 40

**ROAD ELEMENTS AND ROADSIDE FEATURES** ..... **42**
3-500 ROADSIDE FEATURES ..... 42
3-501 ROCK FACINGS ..... 42
3-502 SIDE SLOPES ..... 44
3-503 SLOPE, WALL, & DRAINAGE EASEMENTS ..... 45
3-504 STREET TREES & LANDSCAPING ..... 45
3-505 MAIL BOXES ..... 46
3-506 STREET ILLUMINATION ..... 47
3-507 SURVEY MONUMENTS ..... 51
3-508 ROADWAY BARRICADES ..... 52
3-509 BOLLARDS ..... 52
3-510 GUARDRAIL/EMBANKMENT HEIGHTS ..... 53
3-511 OFF-STREET PARKING SPACES ..... 53
3-512 ROADSIDE OBSTACLES ..... 53
3-513 CONCRETE SIDEWALKS ..... 54
3-514 CURBS, GUTTERS AND SIDEWALKS ..... 55
3-515 EXPANSION AND DUMMY JOINTS ..... 56
3-516 CURB RAMPS ..... 57
3-517 CONCRETE STEPS, METAL HANDRAIL AND HANDICAPPED ACCESS RAMPS ..... 57
3-518 ASPHALT SHOULDERS ..... 58
3-519 SEPARATED WALKWAYS, BIKEWAYS AND TRAILS ..... 58
3-520 BUS ZONES AND TURN-OUTS ..... 59
3-521 BIKEWAYS ..... 60
3-522 MEDIANS (OPTIONAL DESIGN FEATURE) ..... 61
3-523 SCHOOL ACCESS ..... 62
3-524 EQUESTRIAN FACILITIES ..... 62
3-525 TRAFFIC CALMING ..... 63
3-526 TRAFFIC SIGNAL SPECIFICATIONS ..... 63
3-527 GUARDRAILS ..... 65
**BRIDGES** ..... **66**
3-600 BRIDGES ..... 66
3-601 PRINCIPAL REFERENCES ..... 66
3-602 BRIDGE GEOMETRICS ..... 66
3-603 BRIDGE DESIGN CRITERIA ..... 67
3-604 SPECIAL PERMITS ..... 67
**UTILITIES** ..... **69**
3-700 UTILITIES ..... 69
3-701 FRANCHISING POLICY AND PERMIT PROCEDURE ..... 69
3-702 STANDARD UTILITY LOCATIONS WITHIN THE RIGHT-OF-WAY ..... 69
3-703 UNDERGROUND UTILITY INSTALLATION ..... 72
3-704 FINAL UTILITY ADJUSTMENT (TO FINISH GRADE) ..... 77
3-705 FINAL CLEANUP AND RESTORATION ..... 78
**CONSTRUCTION** ..... **79**
3-800 CONSTRUCTION CONTROL AND INSPECTION ..... 79
3-801 BASIS FOR CONTROL OF THE WORK ..... 79
3-802 SUBDIVISION, COMMERCIAL AND RIGHT-OF-WAY INSPECTION ..... 79
3-803 PENALTIES FOR FAILURE TO NOTIFY FOR INSPECTION ..... 81
3-804 EMBANKMENT CONSTRUCTION CONTROL IN DEVELOPMENTS ..... 81
3-805 TRAFFIC CONTROL IN DEVELOPMENT CONSTRUCTION ..... 82
3-806 CITY FORCES AND CITY CONTRACT ROAD INSPECTION ..... 83
3-807 CALL BEFORE YOU DIG ..... 84

3-808 PERMEABLE PAVEMENT ACCEPTANCE INFILTRATION TEST ..... 84
**APPENDIX A ..... 86**
PRINCIPAL, MINOR, AND COLLECTOR ARTERIAL LANE CONFIGURATION ..... 86
**APPENDIX B ..... 89**
DEVELOPMENT STANDARD HANDOUT ..... 89

# CHAPTER 3

# ROAD DESIGN STANDARDS

## GENERAL CONSIDERATIONS

### 3-100 SHORTENED DESIGNATION

These City of Marysville Engineering Design and Development Standards will be cited routinely in the text as the "Standards."

### 3-101 APPLICABILITY

These Standards shall apply prospectively to all newly constructed road and right-of-way facilities, both public and private, within the City of Marysville. In the event of conflict with any other City Standards, the Public Works Director or designee shall determine which standard shall control.

In addition, the Standards apply to modifications of roadway features of existing facilities which are within the scope of reconstruction, required off-site road improvements for land developments, or capital improvement projects when so required by the City of Marysville or to the extent they are expressly referred to in project plans and specifications. These Standards are not intended to apply to "resurfacing, restoration, and rehabilitation" projects as those terms are defined in the WSDOT, Local Agency Guidelines, as amended; however, the Public Works Director or designee may at his discretion consider the Standards as optional goals.

The Standards shall apply to every new placement and every planned, non-emergency replacement of existing utility poles and other utility structures within the City of Marysville right-of-way.

### 3-102 RESPONSIBILITY TO PROVIDE ROADWAY IMPROVEMENTS

A. Any land development which will impact the service level, safety, or operational efficiency of serving roads or is required by other City code or ordinance to improve such roads shall improve those roads in accordance with these Standards. The Public Works Director or designee shall base the extent of off-site improvements to serving roads on an assessment of the impacts of the proposed land development.

B. Any subdivision of land or development as described in Title 12 of Marysville Municipal Code abutting and impacting existing roads shall improve the frontage of those roads in accordance with these Standards. The Public Works Director or designee shall base the extent of on and offsite improvements on an assessment of the impacts of the proposed land development.

C. Any land development that contains internal roads shall construct or improve those roadways to these Standards.

D. It is the City's practice to not allow subdivisions to be recorded unless there exists a recorded continuous public access, i.e., right-of-way or easement to the subdivision except as provided for in Section 3-205, nor will the City accept a road for maintenance until the road is directly connected to a City or other publicly maintained road.

E. All road improvement and development projects shall include pedestrian access as a part of the design. Where existing roadways are to be modified, pedestrian facilities shall be as described in Sections 3-513, 3-518, 3-519, and 3-523.

## 3-103 GENERAL REFERENCES

The Standards implement and are intended to be consistent with:

A. Marysville Municipal Code

B. Marysville Comprehensive Plans

## 3-104 WSDOT/APWA DOCUMENTS AS PRIMARY DESIGN AND CONSTRUCTION REFERENCES

Except where these Standards provide otherwise, design detail, construction workmanship, and materials shall be in accordance with the following publications produced separately by Washington State Department of Transportation (WSDOT), or jointly by WSDOT and Washington State Chapter of American Public Works Association (APWA).

A. WSDOT Standard Specifications for Road, Bridge, and Municipal Construction, as adopted by the City of Marysville, current edition as amended. These will be referred to as the "WSDOT Standard Specifications."

B. The WSDOT/APWA Standard Plans for Road and Bridge Construction, to be referred to as the "WSDOT/APWA Standard Plans," current edition as amended.

C. WSDOT Design Manual, current edition as amended.

D. City Design Standards for the Construction of Urban and Rural Arterial and Collector Roads adopted per RCW 35.78.039 and RCW 43.32.020, May 24, 1989, current edition as amended.

## 3-105 OTHER SPECIFICATIONS

The following shall be applicable when pertinent, when specifically cited in the Standards or when required by state or federal funding authority.

A. Roadway drainage shall be in accordance with the City of Marysville Surface Water Design Standards.

B. WSDOT Local Agency Guidelines, as amended.

C. WSDOT Guidelines for Urban Arterial Program, as amended.

D. Design criteria of federal agencies including the Federal Housing Administration, Department of Housing and Urban Development; and the Federal Highway Administration, Department of Transportation,

E. A Policy on Geometric Design of Highways and Streets, American Association of State Highway and Transportation Officials (AASHTO), or current edition when adopted by WSDOT.

F. Standard Specifications for Highway Bridges, adopted by AASHTO, current edition.

G. U. S. Department of Transportation Manual on Uniform Traffic Control Devices, "MUTCD", as amended and approved by Washington State Department of Transportation, current edition.

H. Guide for the Development of Bicycle Facilities, adopted by AASHTO, current edition,

I. Associated Rockery Contractors, Standard Rock Wall Construction Guidelines.

J. American Society for Testing and Materials (ASTM).

K. City of Marysville Access Management Plan

## 3-106 ROAD PLANS

Plans for roads and road drainage shall be prepared by a Washington State licensed professional Civil Engineer and submitted consistent with these Standards. These requirements shall apply to public or private roads whether constructed by private party or public agency. Appendix A contains a Plan Preparation checklist of construction plan requirements. Subject to review, the Public Works Director or designee may waive plan requirements, wholly or in part, based on the following criteria:

For improvements to existing roads if:

1. No more than 5,000 square feet will be cleared and graded within the right-of-way or easement; and

2. The existing grade or slope in the road right-of-way or easement does not exceed 12 percent; and

3. The work will not intercept a stream or wetland or otherwise impact natural surface drainage as set forth in City Code regarding Sensitive Areas and the Surface Water Design Manual; and

4. Plans do not include a retention/detention facility within the right-of-way; and

5. The work is required of a short plat development, or a right-of-way use permit and involves less than 100 lineal feet of existing public road improvement; and

6. City of Marysville standard drawings, submitted with required permits, are sufficient to describe the improvement to be constructed.

## 3-107 PENALTIES AND FINANCIAL GUARANTEES

Failure to comply with these Standards may result in denial of plan or development permit approval, revocation of prior approvals, legal action for forfeiture of financial guarantee, code enforcement, and/or other penalties as provided by law.

## 3-108 SEVERABILITY

If any part of these Standards as established by ordinance shall be found invalid, all other parts shall remain in effect.

## ROAD TYPES AND GEOMETRY

## 3-200 ROAD CLASSIFICATIONS

Functional classifications are used for planning and designing roadway facilities. A functional classification system provides a framework for defining the uses of roadways. For example, roadways may be designed to emphasize through-traffic movement, access to adjacent properties, or some combination of these functions. General definitions of functional classification are presented in the following Table. These definitions will serve as a guide in classifying streets.

Functional classification definitions

| | |
|---|---|
| Freeway/Expressway: | Inter-regional divided highways connecting major centers. Typically, freeways have two or more lanes for traffic in each direction; access is limited to interchanges designed for higher speed merging/diverging traffic. |
| Principal Arterial: | Inter-community roadways connecting community centers or major facilities. Principal arterials are generally intended to serve predominantly "through" traffic. Direct access to abutting property will be discouraged. Spacing between parallel principal arterials is generally two miles or greater. |
| Minor Arterials: | Provides for intra-community travel for areas bounded by the principal arterial system. Minor arterials serve trips of moderate length. Direct access to abutting property will be discouraged. Spacing of minor arterials is typically less than two miles. |
| Collector Arterials: | Provides for movement within a community, including connecting neighborhoods with smaller community centers. Collector arterials also provide connections to minor and principal arterials. Property access is generally a higher priority for collector arterials with a lower priority for through traffic movements. Spacing of collector arterials is generally one mile or less. |
| Neighborhood Collector: | Provides connections to arterial system for individual neighborhoods and provides circulation within and/or between neighborhoods. Spacing of neighborhood collectors is typically one-half mile or less. |
| Local Access Streets: | Primary function of local access streets is access to abutting properties. Local streets include a variety of designs and spacing depending on access needs. |

## 3-201 ARTERIAL ROADS

Comprising the City primary road system, see Standard Plans No. 3-201-001 through 3-201-004.

| CLASSIFICATION | PRINCIPAL ARTERIALS | MINOR ARTERIALS | COLLECTOR ARTERIALS OR "COLLECTORS" |
|---|---|---|---|
| | | | |
| Access | See Marysville Access Management Plan | See Marysville Access Management Plan | See Marysville Access Management Plan |
| **Land Use Area** | | | |
| Arterial Spacing | 2 miles or greater | Under 2 miles | Under 1 mile |
| | | | |
| CRITERIA | | | |
| A. Typical Road Type | Curb & Gutter [7] | Curb & Gutter [7] | Curb & Gutter [7] |
| B. Design Speed (MPH) | Varies 30-40 | Varies 30-40 | Varies 30-40 |
| C. Horizontal Curvature | See Table 3-2.1 | See Table 3-2.1 | See Table 3-2.1 |
| D. Maximum Grade (%) [3] | 10 | 10 | 12 |
| E. Standard Stopping Sight Distance (Ft). (4) | See Table 3-2.1 | See Table 3-2.1 | See Table 3-2.1 |
| F. Standard Entering Sight Distance (Ft.) [5] | See Table 3-2.1 | See Table 3-2.1 | See Table 3-2.1 |
| G. Minimum Passing Sight Distance on 2-Lane Road (Ft.) | See Table 3-2.1 | See Table 3-2.1 | See Table 3-2.1 |
| H. Corner Radii | See Section 3-209 | See Section 3-209 | See Section 3-209 |
| I. Min. Half St. Paved Width (ft) | 30 | 24 | 22 |

NOTES:

1. Within the above parameters, geometric design requirements shall be determined for specific arterial roads consistent with the WSDOT Design Manual.
2. Design speed is a basis for determining geometric elements and does not imply posted or legally permissible speed. Curves shall be designed within parameters of section 3-204.
3. Maximum grade may be exceeded for short distances. (See Section 3-210).
4. Standard Stopping Sight Distance (SSD) shall apply unless otherwise approved by the Engineer (See Section 3-211).
5. Standard Entering Sight Distance (ESD) shall apply at intersections and driveways unless otherwise approved by the Engineer (See Section 3-212).
6. Criteria for state and federal funding may require greater width. For guardrail installations, shoulders shall be two feet wider.
7. Pervious concrete pavement and other Low Impact Development (LID) stormwater techniques are allowed without a waiver and may modify this requirement, subject to plan review and approval.

## 3-202 RESIDENTIAL ACCESS STREETS

See Standard Plan No 3-202-001 through 3-202-004

| CLASSIFICATION | NEIGHBORHOOD COLLECTORS | LOCAL ACCESS STREETS | LOCAL ACCESS STREETS | PRIVATE ROADS (RESIDENTIAL) (13) |
|---|---|---|---|---|
| **Land Use Area** | | | | |
| Serving Potential Number of Single-Family Dwelling Units | 300 Max. | 100 Max. | 9 Max. | 1 to 4 total lots and 2 to 8 total Units |
| CRITERIA | | | | |
| A. Typical Road Type | Curb & Gutter [12] | Curb & Gutter [12] | Curb & Gutter [12] | Shoulder [12] |
| B. Design Speed (MPH) [5] | 30 | 25 | 25 | 20 |
| C. Horizontal Curvature Min. Radius (Ft.) [12] | 300 | 165 | 165 | 90 |
| D. Max. Grade [6] | 12 | 15 | 15 | 15 |
| E. Standard Stopping Sight Distance (Ft.) [7] | 200 | 155 ft. | 155 | 115 |
| F. Standard Entering Sight Distance (Ft.) [8] | 250 | 200 | 200 | 150 |
| G. Pavement Width (Ft.) | 36 | 28 | 24 | Varies (See Std. Plan 3-202-004) |
| H. Right-of-way Width (Ft.) | 60 | 50 | 40 | Varies (See Std. Plan 3-202-04) |
| I. Corner Radii | See Section 3-209 | See Section 3-209 | See Section 3-209 | See Section 3-209 |
| J. Min. Half St. Paved Width (Ft.) | 20 | 20 | None | None |

NOTES:

1. Within the above parameters, geometric design for specific streets shall be consistent with AASHTO Policy on Geometric Design of Highways and Streets.
2. See Section 3-213 for one-way loops.
3. See Section 3-215 for residential access connection requirements.
4. See Section 3-216 for urban exception criteria.
5. Design speed is a basis for determining geometric elements and does not imply posted or legally permissible speed.
6. Maximum grade may be exceeded for short distances. (See Section 3-210).
7. Standard Stopping Sight Distance (SSD) shall apply unless otherwise approved by the Engineer. (See Section 3-211).
8. Standard Entering Sight Distance (ESD) shall be determined at intersections and driveways unless otherwise approved by the Engineer (See Section 3-212).
9. For guardrail installation, shoulders shall be two feet wider.
10. For Local Access Streets only an elbow intersection may be constructed in accordance with standard plan 3-209-002
11. Private roads are only permitted in Short Subdivisions with 4 or less total development lots.

12. Pervious concrete pavement and other Low Impact Development (LID) stormwater techniques are allowed without a waiver and may modify this requirement, subject to plan review and approval.

## 3-203 COMMERCIAL ACCESS STREETS[1]

| CLASSIFICATION | MIXED USE DISTRICT ACCESS STREETS | BUSINESS ACCESS STREETS | INDUSTRIAL ACCESS STREETS |
|---|---|---|---|
| CRITERIA | | | |
| A. Typical Road Type | Curb & Gutter [9] | Curb & Gutter [9] | Curb & Gutter [9] |
| B. Design Speed (MPH) [3] | 35 | 35 | 35 |
| C. Horizontal Curvature Min. Radius (Ft.) [3] | See Table 3-2.1 | See Table 3-2.1 | See Table 3-2.1 |
| D. Maximum Grade (%) [4] | 12 | 12 | 11 |
| E. Standard Stopping Sight Distance (Ft). [5] | See Table 3-2.1 | See Table 3-2.1 | See Table 3-2.1 |
| F. Standard Entering Sight Distance (Ft.) [6] | See Table 3-2.1 | See Table 3-2.1 | See Table 3-2.1 |
| G. Right-of-Way Width (Ft.)[8] | 50-70 | 50-70 | 50 |
| H. Min. Half Street Paved Width (Ft.) | 20 | 20 | 20 |
| I. Min. one-way Paved Width (Ft.) | 20 | 22 | 24 |

NOTES:

1. See standard plan 3-201-003, 3-201-004 and 3-203-001
2. "Commercial Access Streets" serve multiple dwelling, business, and industrial developments. Within the above parameters, geometric design requirements shall be determined for specific streets consistent with the WSDOT Design Manual.
3. Design speed is a basis for determining geometric elements and does not imply posted or legally permissible speed. Curves shall be designed within parameters of section 3-204).
4. Maximum grade may be exceeded for short distances (See Section 3-210).
5. Standard Stopping Sight Distance (SSD) shall apply unless otherwise approved by the Engineer. (See Section 3-211).
6. Standard Entering Sight Distance (ESD) shall apply at intersections and driveways unless otherwise approved by the Engineer. (See Section 3-212).
7. For guardrail installations, shoulders shall be two feet wider.
8. Right-of-Way width varies based on roads classified with bike lanes and or planter strips.
9. Pervious concrete pavement and other Low Impact Development (LID) stormwater techniques are allowed without a waiver and may modify this requirement, subject to plan review and approval.

## 3-204 ARTERIAL HORIZONTAL CURVATURE AND SIGHT DISTANCE DESIGN VALUES

The design values shown in Tables 3-2.1 are minimum values necessary to meet the requirements of Sections 3-201 and 3-203 for a selected design speed and road classification. Superelevation on horizontal curves shall not be used unless approved by the Public Works Director or designee.

**Table 3-2.1**

**Arterial Streets and Commercial Access Streets**
**Design Values**

| Design Speed (mph) | 30 | 35 | 40 |
|---|---|---|---|
| Horizontal Curvature (Ft.) | 300 | 454 | 667 |
| Stopping Sight Distance (Ft.) | 200 | 250 | 305 |
| Entering Sight Distance (Ft.) | 375 | 470 | 575 |
| Passing Sight Distance (Ft.) for a 2-Lane Road | 1,100 | 1,300 | 1,500 |

## 3-205 PRIVATE STREETS

A. While community street requirements are usually best served by public streets, owned and maintained by the City, private streets may be appropriate for some local access streets. Usually these are minor access streets, either residential or commercial.

B. Private streets may be approved only when they are:
   1. Permanently established by right-of-way, tract or easement providing legal access to each affected lot, dwelling unit, or business and sufficient to accommodate required improvements, to include provision for future use by adjacent property owners when applicable; and

   2. Built to these Standards as set forth herein; Standard Plan 3-202-004; and

   3. Accessible at all times for emergency and public service vehicle use; and
   4. Not obstructing, or part of, the present or future public neighborhood circulation plan developed in the Marysville Comprehensive Plan.

5. Not going to result in land locking of present or future parcels; and

6. Not needed as public roads to meet the minimum road spacing requirements of these Standards; and

7. A private road maintenance agreement consistent with Appendix E has been approved, recorded, and verified with the City, which will provide for maintenance of the private streets and associated parking areas by owners in the development.

8. At least one of the following conditions exists:

    a. The private street is located within a short subdivision.

    b. The roadways serve commercial or industrial facilities where no circulation continuity is necessary.

    c. The Public Works Director or designee and Fire Marshal determines that no other access is available and the private road is adequate.

9. Maintained by a capable and legally responsible owner or homeowners' association or responsible entity or parties including all benefited property owners; and

10. Clearly described on the face of the plat, short plat, or other development authorization and clearly signed at street location as a private street, for the maintenance of which City of Marysville is not responsible.

C. The City of Marysville will not accept private streets for maintenance as public streets until such streets are brought into conformance with current City road standards.

D. The City of Marysville will not accept private streets within short plats when the roads providing access to the short plat are private and already have the potential to serve more than the number of lots specified in Section 3-202. Short plats proposed on properties to which the access is over private streets that do not meet the standards in this section shall be denied.

E. Private access shall conform to Standard Plan 3-202-004 for private roads and access easements subject to:

1. A maximum of four (4) lots or in the case of duplexes (8) units are accessed from the private road.
2. Minimum tract width of 20 feet for up to one (1) lot or two (2) units, and 30 feet for two (2) to four (4) lots or four (4) to eight (8) units.
3. Access road length shall not exceed 300 feet and shall not extend from any portion of a public cul-de-sac.
4. Private roads exceeding 150' shall construct a turn-a-round consistent with Standard Plan 3-207-004.

## 3-206 HALF STREETS

See Standard Plans 3-206-001.

A. A half street may be permitted as an interim facility when:

1. Such street shall not serve as primary access to more than 25 dwelling units or tax lots for residential or 240 ADT for commercial/industrial; and

2. Such alignment is consistent with or will establish a reasonable circulation pattern; and

3. There is reasonable assurance of obtaining the prescribed additional right-of-way from the adjoining property with topography suitable for completion of a full-section road.

4. To provide access to an existing Standard City Street.

B. A half street shall meet the following requirements:

1. Right-of-way width of the half street shall equal at least 30 feet; and

2. If feasible the half street shall be graded consistent with locating centerline of the ultimate road section on the property line; and

3. Traveled way shall be surfaced the same as the designated road type to a width not less than 20 feet, sidewalk shall be constructed as required for the designated road type; and

4. Property line edge of street shall be finished with temporary curbing, shoulders, ditches, and/or side slopes so as to assure proper drainage, bank stability, and traffic safety; and

5. Half streets shall not intersect other half streets unless so approved by the Public Works Director or designee.

C. When a half street is eventually completed to a whole street, the completing builder shall reconstruct the original half street as necessary to produce a proper full-width street of designated section.

D. The obtaining of any right-of-way or easements needed to accomplish the above shall be the responsibility of the owning builder or developer.

## 3-207 CUL-DE-SACS AND EYEBROWS

See standard plans 3-207-001 through 3-207-003.

A. Whenever a dead end public street serves 5 or more lots or a private/public road extends more than 150 feet from edge of the intersecting right of way to farthest extent of the road an approved turn-a-round shall be constructed as follows:

1. Minimum right-of-way diameter across bulb section: 100 feet in a permanent cul-de-sac for all public roads; and 84 feet in a temporary cul-de-sac, with bulb area lying outside straight-street right-of-way provided as temporary easement pending forward extension of the street.

2, Minimum diameter of surfacing across bulb: 80 feet of paving in curb, gutter, and sidewalk roadway section; 80 feet total in shoulder type or thickened edge cul-de-sacs to include 64 feet of paving and eight-foot shoulders with compacted crushed surfacing material. See Standard Plan 3-207-001.

3. Private roads shall construct a turn-a-round consistent with Standard Plan 3-207-004.

B. A permanent cul-de-sac shall not be longer than 600 feet measured from the edge of intersecting street right of way to the geometric center monument of the cul-de-sac. The Public Works Director or designee based on pertinent traffic planning factors such as topography; sensitive areas and existing development will consider exceptions to this rule.

C. The Public Works Director or designee may require an emergency vehicle access to connect a cul-de-sac at its terminus with other streets.

D. If a temporarily cul-de-sac exists, removal of the temporary cul-de-sac, re-grading/restoration of disturbed area, and extension of the sidewalk shall be the responsibility of the developer who extends the road. See Standard Plan 3-207-002.

E. The maximum cross slope in a bulb shall not exceed 6 percent. Partial bulbs or eyebrows shall have a minimum paved radius and an island configuration as shown on Standard Plan 3-207-003. Island shall be offset two feet from edge of traveled way.

F. Pedestrian walkways shall be provided on all permanent cul-de-sacs to abutting property see Standard Plan 3-207-001.

## 3-208 ALLEYS

A. An alley is considered a public road. Requirements of Section 3-202, local access streets, for horizontal curvature and stopping sight distance, apply.

1. New alleys serve a maximum of 30 lots, with a maximum length of 400 feet, no dead ends or cul-de-sacs.

2. Minimum right-of-way width 20 feet with a pavement surface of 20 feet. For differing structure setback requirements, alley configuration shall be designated to provide for safe turning access to properties.

3. Paved surface shall be in accordance with Standard Plan 3-208-001.

4. Modifications to existing alleys serving commercial or industrial properties, in accordance with the above, will be determined on a case-by-case basis subject to approval by the Public Works Director or designee.

5. Additional right of way and/or pavement width for parking and/or pedestrian facilities may be require on a case-by-case basis as determined by the Public Works Director / Community Development Director or designee.

6. Existing substandard alleys are required to be improved to meet the current standards upon development / re-development of an adjoining parcel.

## 3-209 INTERSECTIONS

A. Intersections

| | |
|---|---|
| 1. Angle of intersection (measured at 10 feet beyond road classification right-of-way) | Minimum 85 degrees<br>Maximum 95 degrees |
| 2. Minimum centerline radius (2-lane) | 55 Feet |
| 3. Minimum curb radius | |
| Local street intersecting local street | 20 feet |
| Local street intersecting neighborhood collector | 25 feet |
| Any street intersecting arterial | 35 feet |

*Truck route curb radius may be increased as determined by the Public Works Director or designee.

| | |
|---|---|
| 4. Minimum right-of-way line radius or fillet | Varies |

B. Spacing between adjacent intersecting streets, whether crossing or T-connecting, shall be as follows:

| When highest classification involved is: | Minimum centerline offset shall be: |
|---|---|
| Principal arterial | 1,000 Feet |
| Minor arterial | 500 Feet |
| Collector arterial | 300 Feet |
| Residential Access Streets | 150 Feet |

C. On sloping approaches at an intersection, landings shall be provided with grade not to exceed one-foot difference in elevation for a distance of 30 feet approaching an arterial or 20 feet approaching a residential or commercial street. The distance shall be measured from future right-of-way line (extended) of intersecting street. See Standard Plan 3-209-001.

D. Entering Sight Distance, See Sections 3-212 for design requirements.

E. Elbow Intersections per standard plan 3-209-002 are allowable on local access streets only and are subject to intersection spacing requirements established under this section.

## 3-210 MAXIMUM GRADE AND GRADE TRANSITIONS

A. Maximum grade as shown in Sections 3-201, 3-202, and 3-203 may be exceeded for short distances of 300 feet or less, upon showing that no practical alternative exists. Exceptions that exceed 15% will require approval by the Public Works Director or designee and the Fire Marshal. Grades exceeding 15 percent shall be paved with Portland cement concrete (PCC).

B. Grade transitions shall be constructed as smooth vertical curves except in intersections where the difference in grade is one percent or less and upon approval of the Public Works Director or designee.

## 3-211 STOPPING SIGHT DISTANCE (SSD)

See Standard Plans 3-211-001 and 3-211-002

SSD applies to street classifications as shown in Sections 3-201, 3-202 and 3-203. See Tables 3-2.1 for specific SSD values for arterial streets based on required design speed.

A. Height of eye is 3.5 feet and height of object is 0.5 feet.

B. Minimum SSD for any downgrade averaging three percent or steeper as provided in Section 3-202 and section 3-204, Table 3-2.1 shall be as shown below (Source AASHTO Policy on Geometric Design, 2004, Exhibit 3-2)

**SSD (FT)**

| DESIGN SPEED (MPH) | Downgrades | | | Upgrades | | |
|---|---|---|---|---|---|---|
| | 3 Percent | 6 Percent | 9 Percent | 3 Percent | 6 Percent | 9 Percent |
| 40 | 315 | 333 | 354 | 289 | 278 | 269 |
| 35 | 257 | 271 | 287 | 237 | 229 | 222 |
| 30 | 205 | 215 | 227 | 200 | 184 | 179 |
| 25 | 158 | 165 | 173 | 147 | 143 | 140 |
| 20 | 116 | 120 | 126 | 109 | 107 | 104 |

C. Sag vertical curves on neighborhood collectors and local access streets with stopping sight distance less than that called for in Section 3-202 may be approved by the Public Works Director or designee if no practical design exists and if road lighting consistent with current design standards is provided throughout the curve.

## 3-212 ENTERING SIGHT DISTANCE (ESD)

See standard plan 3-212-001

Entering sight distance applies on driveways and on streets intersections as set forth in Sections 3-201, 3-202, and 3-203. Specific ESD values for required design speeds are listed in Section 3-204, Tables 3-2.1 for arterial streets and 3-202 for residential access streets.

A. Entering vehicle eye height is 3.5 feet, measured from 15 to 20 feet back from edge of face of curb or from the travel lane on a ditch section roadway. Approaching vehicle height is 4.25 feet. See standard plan 3-212-002.

B. Requirements in Section 3-204, Tables 3-2.1 and section 3-202 apply to an intersection or driveway approach to a typical road under average conditions. In difficult topography the Public Works Director or designee may authorize a reduction in the ESD based on factors mitigating the hazard. Such factors may include an anticipated posted or average running speed less than the design or posted speed or the provision of acceleration lanes and/or a median space allowing an intermediate stop by an approaching vehicle making a left turn.

C. Where a significant number of trucks will be using the approach road, the Public Works Director or designee may increase the entering sight distance requirements by up to 30 percent for single-unit trucks and 70 percent for semi-trailer combinations.

D. On low volume driveways, the ESD may be reduced by the Public Works Director or designee to the SSD per standard plan 3-212-002.

## 3-213 ONE-WAY STREETS

Local access streets, including loops, may be designated one-way upon a finding by the Public Works Director or designee that topography or other site features make two-way traffic impractical.

## 3-214 INTERSECTIONS WITH STATE OR FEDERAL HIGHWAYS

In the event that the City has jurisdiction over a development that requires the construction or improvement of a commercial/industrial driveway or any classification of street that intersects a county, state or federal highway, minimum intersection spacing, entering sight distance and landing requirements in accordance with these Standards shall be satisfied in addition to the requirements of all other applicable permits. In the instance County, State, or Federal standards exceed these Standards, County, State, or Federal standards shall govern.

## 3-215 ROAD CIRCULATION

Road circulation is important in road systems for the following reasons:

- Operation of the arterial road system is improved by dispersing local traffic onto multiple roads and access points;
- Response time for emergency services is reduced;
- Time and mileage traveled by individuals and service providers, including school bus transportation, mail delivery, utilities, etc. is reduced; and
- Use of transit systems, and pedestrian and bicycle facilities, is promoted.

A. The following criteria for road circulation shall be used in the layout and design of new road systems:

1. Road systems internal to developments shall be designed to promote the convenient circulation of traffic without reliance on the arterial road system. Circulation shall be provided in a manner, where possible, that will allow subsequent developments to meet these standards.

2. Road stubs shall be constructed to the boundary of adjacent parcels to create an interconnected road system, unless topography, critical areas or other factors make road construction impractical. A road stub proposal shall include information to demonstrate that the off-site road connection is constructible. That is, the location is such that an off-site road connection could be made that would avoid sensitive areas or topographical constraints, and be feasible road location for adjacent land development.

3. A road serving more than 250 ADT shall be connected in at least two locations with another road or roads that meet the applicable standard(s) for the resulting traffic volume.

4. A road connection shall be made to any road stub on an adjacent parcel that has been constructed to the shared boundary, or where a road stub on an adjacent parcel has been established by right-of-way or easement, but is not yet constructed to the shared boundary. This requirement may be waived by variance where it can be shown that topography, critical areas or other factors make the connection impractical.

5. The Engineer may determine that a non-motorized connection (shared use path or bikeway) between developments is appropriate in place of a roadway, through the variance process.

B. The second access requirement may not be satisfied through use of an existing road way network in the existing adjacent neighborhood if:

1. A more practical alternative exists, or

2. Existing streets do not meet Section 3-202, or

3. A portion of the existing roadway network providing secondary access consists of a private road.

These provisions are not intended to preclude the state statute on land locking.

C. Multi-family or commercial projects gaining access through a residential development is discouraged and requires City Engineer or designee approval on a case by case basis for special circumstances. Traffic impacts for such projects will be analyzed during the SEPA process.

## 3-216 EXCEPTION FOR MAXIMUM DWELLING UNITS ON NEIGHBORHOOD COLLECTOR

Proposed neighborhood collectors serving developments with an average density of seven to eight dwelling units per acre and which meet the access requirements of Section 3-215 may serve up to 300 single family dwelling units, if approved by the Public Works Director or designee. Prior to approval, the Public Works Director or designee may require a traffic circulation study showing a balanced traffic flow of less than 1500 vehicles per day past any access point. Street trees shall be mandatory along neighborhood collectors serving higher densities of eight to eighteen dwelling units per acre and shall be in conformance with Section 3-504.

## 3-217 CHANNELIZATION PLAN

The Public Works Director or designee shall approve a channelization and signing plan. The plan shall comply with the current version of the MUTCD and section 3-406.

## 3-218 PLANNED RESIDENTIAL DEVELOPMENT (PRD) ACCESS STREETS

PRD Access Streets shall only be used as permitted by the Marysville Municipal Code Chapter 22G.080 (Planned Residential Developments) and per Standard Plans 3-218-001 & 3-218-002.

Private Roads per standard plan 3-202-004 may only be used in special circumstances as determined by the City Engineer/Community Development Director or designee.

PRD Access Streets may be required to increase travel lane width, curb return radius and/or include left turn pockets at intersections as determined by the City Engineer or designee.

## 3-219 AUTOCOURTS

Definitions:
"Auto court" means an access way that is privately owned and maintained, that is designed to accommodate vehicles, pedestrians, and bicycles within the same circulation space. An auto court is not a through facility; it ends in a "court" or courtyard area used for garage access and other activities of the residents. For examples, see the City of Marysville Small Lot Design Guidelines.

"Court" means a short street, especially a wide alley walled by buildings on 3 sides.

Design Requirements:

- Shall serve a maximum of 6 units.
- An auto court is only allowed in a Planned Residential Development (PRD).
- Shall not access from an arterial street or from a cul-de-sac.
- Maximum length of 150 feet unless an acceptable emergency vehicle turnaround is provided and designed so vehicles will not back onto public streets.
- Minimum width of 20 feet.
- Surfacing with scored concrete, paving blocks, bricks, or other ornamental pavers to clearly indicate that the entire surface is intended for pedestrians as well as vehicles.
- Driveway length may be reduced to between three feet and six feet for garages when at least two parking spaces are provided for the unit in addition to the garage. The additional parking shall be conveniently located to the dwellings.
- Minimum separation of opposing garage doors facing the auto court shall be 28 feet.

- Minimum distance between a garage door and the far side of the driving surface not abutting a garage door shall be 24 feet.
- The "court" at the end of the auto court shall be sized to provide a minimum 24 foot backup distance from the end of any garage, driveway apron, or parking area, and demonstrate the ability for a vehicle to turn around.

## SITE ACCESS

### 3-300 GENERAL

A. Access to City roads is regulated through the Right of Way (R/W) Use permit process. No construction of access points or related improvements will be allowed without a valid R/W Use permit. Permits will be evaluated and issued based on the ability of the proposed access or use to meet these Standards.

B. If a proposed property access point cannot meet these Standards, the Engineer may designate one or more access points based on traffic safety, operational needs, and conformance to as many of the requirements of these Standards as possible.

C. Access points for parking or loading areas shall be designed so that backing maneuvers from or onto a public street R/W will not occur. This does not apply to single family or duplex residential uses on non-arterial roads.

D. Where necessary for the safe and efficient movement of traffic, the Engineer may require investigation by the applicant to determine whether access points should be designed to limit turning movements. The Engineer may also require joint access and circulation agreements between neighboring properties to further provide safe and efficient movement of traffic.

E. Temporary access may be granted to undeveloped property prior to completion of a final development plan if access is needed for construction of preliminary site access. Temporary access points are subject to removal, relocation, or redesign after final development plan approval.

F. Secondary access for emergency vehicles may be required for certain high volume or public safety sensitive developments. They shall be designed to the satisfaction of the Public Works Director or designee based on review by the City of Marysville Fire Department.

G. No relocation, alteration or reconstruction of existing access points is permitted without prior written approval from the Public Works Director or designee.

H. Existing Access points that do not meet these standards may be required to be revised or removed if deemed necessary by the Public Works Director or designee.

## 3-301 ARTERIAL ACCESS STANDARD

The access management plan spacing standards for implementation in the City of Marysville arterial system are shown in the Table 3-3.1. Standard Plan No. 3-301-001 depicts the corresponding dimensional locations graphically. As shown in Table 3-3.1, the driveway spacing standards for a full access driveway range from 125 feet to 300 feet depending on the speed of the arterial, adjacent intersection traffic control, and spacing between adjacent driveways.

**Table 3-3.1**
**Driveway Location and Spacing Guidelines**

| Posted Speed | Adjacent Intersection Control | Full Access (A) | Right Turn In/ Right Turn Out Only (B) | Right Turn Out or Right Turn In Only (C) |
|---|---|---|---|---|
| < or = 30 MPH | STOP SIGN | 125 FT | 100 FT | 100 FT |
| < or = 30 MPH | SIGNALIZED | 230 FT | 125 – APPROACH<br>150- DEPART | 100 FT |
| 35 MPH | STOP SIGN | 150 FT | 120 FT | 120 FT |
| 35 MPH | SIGNALIZED | 250 FT | 150 – APPROACH<br>200- DEPART | 135 FT |
| 40 MPH | STOP SIGN | 175 FT | 140 FT | 140 FT |
| 40 MPH | SIGNALIZED | 275 FT | 175 – APPROACH<br>250- DEPART | 150 FT |

Refer to Standard Plan No. 3-301-001 for corresponding graphic locations

Driveway spacing standards for right turn in/right turn out only driveways are slightly lower ranging from 100 feet to 250 feet depending on arterial speed, traffic control and the direction of travel relative to adjacent signalized intersections. The direction of travel relative to the intersection (approaching or departing) is important to maintaining traffic flow where accelerating vehicles and drivers slowing down to enter driveways are the cause of many rear end accidents.

Right turn driveway spacing standards are lower since there are less points of vehicular conflict. Access locations restricted to right turn in only or right turn out only movement range from 100 feet to 150 feet depending on arterial speed and traffic control.

In addition to the access driveway spacing standards above, the following standards should also be considered and implemented as applicable:

- Driveways are to be restricted to right turns only with the use of medians or driveway pork-chop islands with appropriate signing consistent with WSDOT design criteria and the Manual on Uniform Traffic Control Devices (MUTCD).

- Left turn access may be restricted if left turn traffic movements significantly interrupt traffic flow and operations as determined by the Public Works Director or designee. Channelization allows traffic to exit the main flow of traffic to conduct the left turn movement while maintaining the capacity of the through lanes. Left turn channelization warrant analysis based on WSDOT Design Manual guidelines should be conducted to identify if improvements should be provided or constructed.

- Only one (1) full access shall be allowed for every 500 feet of any contiguous parcel ownership or master plan arterial frontage. In all cases, the number of access locations should be minimized and existing access consolidated if possible.

- Access point should be placed directly opposite each other. If this is not possible, a separation between the nearest edges of such opposite access points shall meet the spacing criteria set forth in Table 3-3.1.

- Where a property has frontage on more than one roadway, access will generally be limited to the lowest volume roadway where the impacts of a new access will be minimized. Access onto other higher volume roadways may be denied or restricted in the interest of traffic safety or in order to lessen congestion on the higher volume road.

- The spacing measurement for all access standards shall be measured from the near edge of access driveways and the right-of-way line for public streets or the near edge of the adjacent driveway.

- Spacing for proposed driveways access adjacent to railroad right of way shall be measured from the railroad stop bar to the near edge of the driveway.

- Provisions for joint access may be required for two adjacent developments where a proposed new access will not meet the spacing requirements of this plan or to limit the number of access points on the arterial. In the event the adjacent property is not ready for development, the first property ready for development may use an interim access.

- Sight distance standards for ingress and egress movements shall be satisfied for all proposed access locations based on section 3-212.

Requiring turn movement restrictions based on traffic volumes should be considered when average daily traffic volumes on the arterial reaches between 24,000 to 28,000 vehicles per day. National studies have indicated that arterials with two-way left turn lanes start to become unsafe at this level of daily traffic, although most retrofitting projects occur when traffic volumes reach approximately 40,000 ADT. Access restriction considerations due to high traffic volumes should be reviewed on a case-by-case basis depending on the hourly loading of the daily volumes and the distribution of traffic volumes during the peak hours.

Variance to the arterial access standard is as follows:

A. A variance to the Marysville Access Management Plan standards shall be granted by the City, only if the applicant demonstrates all of the following in writing:
    1. Special conditions and circumstances exist which are peculiar to the land such as size, shape, topography or location, not applicable to other lands in the same neighborhood, and that literal interpretation of the provisions of the access standards would deprive the property owner of rights commonly enjoyed by other properties similarly situated in the same neighborhood;

    2. Special conditions and circumstances do not result from the actions of the applicant, and are not self-imposed hardships;

    3. Granting of the variance requested will not confer a special privilege to the subject property that is denied other lands in the same neighborhood;

4. Granting of the variance will not be materially detrimental to the public welfare or injurious to the property or improvements in the neighborhood in which the subject property is situated;

5. Granting of the variance requested will be in harmony with the general purpose and intent of the access management plan and engineering standards;

6. The purpose of the variance is not merely to permit the subject property to be utilized more profitably by the owner or to economize on the cost of improving the property;

7. Granting of the variance will not be detrimental to the existing safety or capacity of the corridor.

B. In granting any variance the City may prescribe appropriate conditions and safeguards that will ensure that the purpose and intent of the access management plan and engineering standards will not be violated.

C. The Public Works Director or designee may approve, approve with conditions, or deny variances to the Access Management Plan standards. For change in existing Land Use, Public Notice of the variance request will be provided to property owners within 300 feet of the subject property. All decisions shall be accompanied by written finding relating to the variance criteria. The Public Works Director or designee's decisions under this section shall be final on the date issued. Administrative interpretations and administrative approvals may be appealed by applicants or aggrieved adjacent property owners to the Hearing Examiner. Appeal shall be filed within 14 days of the issuance of decision. The appeal process is identified in Chapter 15.11 of the Marysville Municipal Code.

## 3-302 NON-ARTERIAL ACCESS STANDARDS

- The nearest edge of any access point shall be a minimum of 6 feet from the property line.

- No access point shall be placed within the entering sight distance triangle see section 3-212.

- The nearest edge of any access point flare or radius must be at least 3 feet from the nearest point of a fire hydrant, no parking zone, utility pole, traffic signal installation or light standard, mailbox cluster or similar appurtenance.

- On lot frontages with 75 feet or less, no more than one driveway per lot shall be constructed. On lot frontages over 75 feet, two or more driveways per lot may be permitted, subject to approval by the Public Works Director or designee and in accordance with the maximum allowable frontage requirements see section 3-303.

- A minimum corner clearance of 50 feet shall be maintained from the nearest edge of any access point to the edge of traveled way. When minimum corner clearances cannot be attained, the Engineer may require investigation to substantiate whether or not left turns should be prohibited into or out of the access point see standard plan 3-301-001 dimension A.

- Where a property has frontage on more than one roadway, access will generally be limited to the lowest volume roadway where the impacts of a new access will be minimized. Access onto other higher volume roadways may be denied or restricted in the interest of traffic safety or in order to lessen congestion on the higher volume road.

## 3-303 DRIVEWAYS

A. Dimensions, slope, and detail shall be as indicated in Standard Plans 3-303-001 through 3-303-003, as further specified in the following subsections.

B. Conditions for Approval of New Driveways:

1. Driveways directly giving access onto arterials may be denied if alternate access is available see section 3-301.

2. All abandoned driveway areas on the same frontage shall be removed and the curbing and sidewalk shall be properly restored.

3. Maintenance of driveway approaches shall be the responsibility of the owner whose property they serve.

4. The standard driveway width shall be 12 feet minimum and 26 feet maximum for single family residential uses, 20 foot minimum and 30 foot maximum for multiple family residential uses, and 24-foot minimum and 40 foot maximum for commercial/industrial driveways. Driveways shall be the minimum width feasible.

5. Driveway widths shall not be wider than 30% of the property's roadway frontage. Except as provided in MMC.

6. Recommended driveway width standards for the City's pedestrian oriented corridors shall be 30% less than the standard driveway width.

C. Location and Width of New Driveways.

1. A residential driveway shall typically serve only one parcel. A driveway serving more than one parcel shall be classed as a commercial driveway or a private street, except as provided in 2.a. and 2.b. below.

2. No portion of driveway width shall be allowed within 6 feet of side property lines except as follows:

   a. A joint use driveway tract/easement may be used to serve two parcels:

      (1) Minimum tract width shall be 20 feet, cross slope in one direction and curb or thickened edge on one side. Minimum tract/easement length shall be 20 feet from right-of-way line.

      (2) The City Engineer or designee may allow use of an easement if the only access to a serving roadway is through an adjacent parcel not owned by the applicant or for residential short plats to satisfy minimum lot width requirements.

      (3) Joint use driveways exceeding 150 feet in length shall provide an approved turnaround.

      (4) Joint use driveways must gain access from a public roadway.

b. Driveways may utilize full width of narrow "pipe-stem" parcels or easements if approved by Public Works Director or designee.

c. On cul-de-sac bulbs as necessary for proposed residential access.

3. Grade transitions, excluding the tie to the roadway, shall be constructed as smooth vertical curves. Ties to the roadway shall be constructed as shown in Standard Plans 3-303-001, 3-303-002 and 3-303-003.

D. Existing driveways may be reconstructed as they exist provided such reconstruction is compatible with the adjacent road.

E. For commercial or industrial driveways with heavy traffic volumes or significant numbers of trucks on arterial streets, the Public Works Director or designee may require construction of the access as a road intersection. The driveway shall be designed with maximum curb return radius of 30 feet and there shall be a pedestrian treatment of red brick, pavers, or Portland cement concrete. This requirement will be based on a traffic engineering analysis submitted by the applicant that meet or exceed the following criteria:

- The development must generate more than 1000 ADT
- The arterial street has an ADT of greater than 15,000
- The posted speed of the arterial is 30 mph or greater
- The site shall not be in an area of high pedestrian activity

F. Notwithstanding any other provisions, driveways will not be allowed where they are prohibited by separate City Council action or where they are determined by the Public Works Director or designee to create a hazard or impede the operation of traffic on the roadway.

G. Access to commercial or industrial use corner lots shall be located on the lower volume roadway and as close as practicable to the property line most distance from the intersection.

H. New private property access points will require the installation of Drop Curb Driveways as shown on Standard Drawings.

I. The design of access points must take into consideration the percentage of truck traffic utilizing the access point. Drainage patterns must also be taken into account in the design of access points.

J. Larger access point radii (typically between 40 and 50 feet but possibly as much as 70 feet) may be required for access points when multi-unit vehicles or single unit vehicles exceeding 30 feet in length (SU vehicle = 30 feet) comprise 10% or greater of the traffic expected to use the access point.

K. Vehicles should be able to utilize radius return access points without encroaching on adjacent lanes of traffic.

## 3-304 NUMBER OF ACCESS POINTS

A. The standard number of access points for a development are:

1. Residential property uses – one two-way access point.

2. Commercial or Industrial property uses – one two-way access point or two one-way access points per 500 feet of any contiguous parcel ownership or total development frontage.

B. Additional access points may be considered by the Engineer provided a development or circulation plan is submitted to the Engineer indicating that more than the maximum number of access points permitted in Subsection a. are required to adequately handle access point volumes, and will not be detrimental to traffic flow on adjacent roads.

C. For large developments, it is often desirable to consolidate access traffic at a single point, which can be signalized. Proposed signalization must meet appropriate warrants in the MUTCD. Access point signals should be coordinated with adjacent traffic signals and located to provide satisfactory signal progression for through traffic.

D. When property frontages are narrow, such that minimum access point spacing criteria cannot be met, it may be necessary to require joint access locations at property lines.

E. The requirements of this section are not intended to override the need for a secondary access for emergency vehicles if such access has been determined by the Fire Marshal to be necessary under the provisions of section 503 of the International Fire Code and MMC 9.04.503.

## 3-305 VERTICAL ALIGNMENT OF ACCESS POINT

A. Approach grades and configuration shall accommodate future street widening to prevent major access point reconstruction.

B. For maximum access grades, see standard drawing 3-303-004.

C. The design Engineer for proposed developments shall consider the access driveway profile when designing the serving road to ensure that required grade transitions can be complied with considering building set back and lot terrain conditions.

## 3-306 SIGHT DISTANCE

For determination of minimum sight distance at private access points, see section 3-212.

## 3-307 ACCESS AND CIRCULATION REQUIREMENTS

The need for left turn, right turn, acceleration and deceleration lanes will be determined in conjunction with development proposals on a case by case basis. Evaluation by the Public Works Director or designee may require submittal of traffic data by the Applicant/Developer.

## 3-308 CONSTRUCTION OF ACCESS POINTS

A. The construction of all access points involving removal of existing vertical curb or vertical curb and gutter shall conform to this section.

B. When cutting through or crossing vertical curb, gutter and sidewalk access approaches must extend from the curb to back of sidewalk and be constructed of Portland cement concrete.

C. When an opening for an access or for any other purpose is to be constructed through an existing Portland cement concrete vertical curb, the existing curb, or curb and gutter shall be saw cut at the limits of work or removed to the nearest construction joint and the opening replaced with standard curb and driveway.

D. Existing street trees, streetlights, traffic signal facilities, utility poles, and fire hydrants must be shown on any plan for access point construction in an area of existing vertical curb.

E. Prior to commencing any necessary removal or relocation of any public utilities, structures, trees, or plantings due to construction of an access point, the applicant/developer must secure approval from the person or persons having ownership or control of such facilities or features.

## SURFACING

## 3-400 SURFACING

### 3-401 RESIDENTIAL STREETS, DRIVEWAYS, PEDESTRIAN AND BIKE FACILITIES

A. The minimum paved section, with alternative combinations of materials, for residential streets, shoulders, sidewalks and bikeways shall be as indicated on the Standard Plans. These sections are acceptable only on good, well drained, stable compacted sub-grade. Any proposed exception to these materials will be subject to soils strength testing and traffic loading analysis and subject to review and approval by the Public Works Director or designee as outlined in Section 3-402. All expenses for determining revised material requirements shall be borne by the Developer.

B. Driveways may be surfaced as desired by the owner, except:

1. On curbed streets with sidewalks, driveway shall be paved with Portland cement concrete Class 4000 or 3000 3-day mix from curb to back edge of sidewalk. See Standard Plans 3-303-001 and 3-303-002.

2. On shoulder and ditch sections, driveway between edge of pavement and right-of-way shall consist of 2 inches of asphalt treated base and 2 inches of asphalt concrete pavement.

3. On thickened edge roadways with underground utilities, Portland cement concrete may be used for driveways between the thickened edge and the right-of-way line provided that a construction joint is installed at the right-of-way line.

4. For driveways required for fire vehicle access, surfacing is required by International Fire Code 503 and MMC 9.04.503.

C. Street widening/adding traveled way to existing roads.

1. When an existing asphalt paved street is to be widened, the edge of pavement shall be saw cut to provide a clean, vertical edge for joining to the new asphalt. After placement of the new asphalt section, the joint shall be sealed and the street overlaid with one inch of asphalt concrete pavement, plus a pre-level course, full width throughout the widened area. The Public Works Director or designee, based on the condition of existing pavement, may waive the requirement for overlay and the extent of required changes to channelization.

2. When an existing shoulder is to become part of a proposed traveled way; the developer's engineer shall perform a pavement evaluation. This evaluation shall analyze the structural capacity and determine any need for improvement. Designs based on these evaluations are subject to review and approval by the Public Works Director or designee. The responsibility for any shoulder material thickness improvement shall be considered part of the requirement for roadway widening. The shoulder shall be replaced in width as specified in Sections 3-201, 3-202 and 3-203.

3. Any widening of an existing roadway, either to add traveled way, paved shoulder or bikeway, the pavement section shall be in accordance with the attached Standard Plans for that classification of roadway.

4. In cut areas, a system to collect drainage shall be installed behind the sidewalk.

5. For off-shoulder walkways, asphalt concrete pavement shall be modified by elimination of the coarse aggregate; i.e. substitute the 3/8" screen for the 5/8 inch screen, Or by using permeable pavement materials.

D. When permeable pavement is used in right of way, pervious concrete pavement shall be used.

## 3-402 REQUIREMENTS FOR RESIDENTIAL STREETS ON POOR SUB-GRADE

The minimum material thickness as indicated on the Standard Plans is not acceptable if there is any evidence of instability in the sub-grade. This includes free water, swamp conditions, fine-grained or organic soil, slides or uneven settlement. If there are any of these characteristics, the soil shall be sampled and tested sufficiently to establish a pavement design that will support the

proposed construction. Any deficiencies, including an R-value of less than 55 or a CBR of less than 20, shall be fully considered in the design. Remedial measures may include, but are not limited to, a stronger paved section, a strengthening of sub-grade by adding or substituting fractured aggregate, asphalt treated base, installing a geotextile, controlled density fill (CDF), more extensive drainage or a combination of such measures. Both the geotechnical report and the resulting pavement design will be subject to review and approval by the Public Works Director or designee. Proposed pavement design to be by an accomplished Geotech certified in the State of Washington.

## 3-403 ARTERIALS AND COMMERCIAL ACCESS STREETS

Any pavement for arterials and commercial access streets shall be designed using currently accepted methodology that considers the load bearing capacity of the soils and the traffic-carrying requirements of the roadway. Plans shall be accompanied by a pavement thickness design based on soil strength parameters reflecting actual field tests and traffic loading analyses. The analysis shall include the traffic volume and axle loading, the type and thickness of roadway materials and the recommended method of placement. Pavement sections shall not be less than those required for neighborhood collectors. Shoulders shall be constructed to the same structural section as the roadway.

## 3-404 MATERIALS & LAY-DOWN PROCEDURES

Shall be in accordance with WSDOT Standard Specifications and the following requirements:

A. All base course shall be ATB except for private roads.

B. During surfacing activities utility covers in roadway shall be adjusted in accordance with Section 3-704.

C. Final lift of asphalt shall be placed prior to recording or to final approval, unless approved by the Director or the Director's designee.

D. Asphalt pavers shall be self contained, power propelled units. Truck mounted type pavers shall only be used for City maintenance and paving of irregularly shaped or minor areas as approved by the Public Works Director or designee, or as follows:

1. Pavement widths are less than eight feet; and

2. Length of pavement is less than 150 feet.

E. If half or full street grind and overlay is required and existing road section is found to be inadequate for grinding and/or drainage flow, road section shall be reconstructed to meet the corresponding road section per the standard plans.

F. Pervious pavements base course and laydown procedures shall be in accordance with WSDOT Local Agencies General Special Provisions.

## 3-405 CONSTRUCTION CONTROL IN DEVELOPMENTS

The provisions of Section 2-03 of the WSDOT Specifications shall apply in all respects to development construction unless otherwise noted. The following elements are mentioned for clarification and emphasis:

A. Compacting Earth Embankments

Compaction of the top two feet of fill subgrade shall meet a minimum 95% of maximum density in accordance with the WSDOT Specifications Section 2-03.3(14)C-Method B. Subgrade fill below the top two feet shall be compacted to 90% of maximum density.

B. Testing for Density

1. Prior to placing any surfacing material on the roadway, the developer/contractor shall provide density test reports certified by a professional engineer registered in the State of Washington. Optimum moisture content and maximum density shall be determined by methods cited in Section 2-03.3(14)D of the WSDOT Specifications. A minimum of one test is required for every two hundred linear feet, for subgrade and embankment. Test location in cut sections, shall be at subgrade. For work to be accepted, and prior to

paving, tests must show consistent uniform density in conformance with these Standards.

2. Density testing for asphalt pavement shall at a minimum be 1 test per 200 lineal feet, taken in a random pattern. The Public Works Director or designee reserves the right to require the developer/contractor to core the asphalt pavement to verify depth and density.

3. Density requirements for all trenches are included in Section 3-703 of these standards.

C. Other Requirements

1. Record drawings of the drainage features are required to be approved prior to paving. Any corrective action needed after review by the City must be undertaken prior to paving.

2. Prior to any site construction involving clearing, logging, or grading, the site/lot clearing limits shall be located and field identified on the approved plans. The developer/project engineer is responsible for water quality on the project site, which includes establishing a water quality monitoring program. The project engineer's name and telephone number shall be listed on the approved construction drawings.

3. The developer shall be responsible to provide suitable materials for construction in accordance with the WSDOT Specifications and these Standards. The developer shall also provide all required materials certifications.

4. Prior to acceptance by the City, the developer/contractor shall provide certification by a registered engineer for the following areas:

   (a) Quality and density of embankment material

   (b) Quality and density for trench backfill materials

   (c) Quality, thickness, and density of all surfacing and base materials, for both roadways and sidewalks

(d) Quality of concrete and concrete items.

5. The Public Works Director or designee reserved the right to reject all non-conforming materials.

## *3*-406 PAVEMENT MARKINGS, MARKERS, PAVEMENT TAPERS, AND SIGNAGE

Pavement markings, markers or striping shall be used to delineate channelization; lane endings, crosswalks and longitudinal lines to control or guide traffic see standard plan. The Public Works Director or designee shall approve channelization plans or crosswalk locations. Channelization shall be required when through traffic is diverted around a lane or obstacle; and when connecting full width streets with different cross sections; and when extending an existing street with a new cross section different than the existing one. The channelization shall provide tapers equal in length to the value derived from the following formula.

$$L = \frac{WS^2}{60}$$

where

L = length of taper

W = width of diversion from the road centerline or the original alignment of travel or the offset distance, as applicable.

S = design speed in miles per hour.

Channelization shall also be required to redirect traffic back to their original alignment.
All channelization shall be designed per the WSDOT Design Manual.

All pavement markings shall be laid out with spray paint and approved by the Public Works Director or designee before they are installed. Approval may require a three working day advance notice to have field layout approved by the Public Works Director or designee or to make arrangements to meet the Public Works Director or designee on site during the installation.

All signage shall be designed in conformance with the current version of the MUTCD. The channelization plan shall show all signage.

All permanent striping and markings shall conform to WSDOT standard specifications 8-22, 9-21 and 9-34 as appended by the City for paint, type A plastic and raised pavement markers unless otherwise specified by the engineer.

## ROAD ELEMENTS AND ROADSIDE FEATURES

## 3-500 ROADSIDE FEATURES

## 3-501 ROCK FACINGS

Rock facings may be used for the protection of cut or fill embankment up to a maximum height of eight feet above the keyway in stable soil conditions which will result in no significant foundation settlement or outward thrust upon the walls. See Standard Plans 3-501-001 through 3-501-004. For heights over eight feet above the keyway or when soil is unstable, a structural wall of acceptable design shall be used. As an exception, rock-facing heights may exceed eight feet to a limited extent based on favorable soil analyses and a design by a geotechnical Engineer or other professional Engineer qualified in rock wall design, subject to approval by the Public Works Director or designee. Terracing of rockeries is subject to approval by the Public Works Director or designee.

A. Materials

1. Size categories shall include:
   Two-man rocks (200 to 700 pounds), 18"-28" in average dimension;
   Three-man rocks (701 to 2000 pounds), 28-36" in average dimension; and
   Four-man rocks (2001 to 4000 pounds), 36-48" in average dimension.

   Four-man rocks shall be used for bottom course rock in all rock facings over six feet in height.

2. The rock material shall be as nearly rectangular as possible. No stone shall be used which does not extend through the wall. The quarried rock shall be angular, hard, sound, durable and free from weathered portions, seams, cracks and other defects. The rock density shall be a minimum of 160 pounds per cubic foot, measured according to WSDOT Test Method 107 (Bulk Specific Gravity - SSD basis). Additionally, rock subjected to the U.S. Army Corps of Engineers Test Method CRD-C-148 ("Method of

Testing Stone for Expansive Breakdown on Soaking in Ethylene Glycol") must have less than 15 percent breakdown.

B. Keyway

A keyway consisting of a shallow trench of minimum 12-inch depth shall be constructed the full rockery length, and slightly inclined towards the face being protected. It shall be excavated the full rockery width including the rock filter layer. The keyway subgrade shall be firm and acceptable to the Public Works Director or designee. See Standard Plans 3-501-001 through 3-501-504.

C. Underdrains

1. A minimum six-inch diameter PVC perforated or slotted drainpipe shall be placed in a shallow excavated trench located along the inside edge of the keyway. The pipe shall be bedded on and surrounded by "Gravel Backfill for Drains" (WSDOT 9-03.12(4)) to a minimum height of 18 inches above bottom of pipe. A filter fabric shall surround the gravel backfill and shall have a minimum one-foot overlap along the top surface of the gravel. The Public Works Director or designee may waive this requirement for fabric if shown that soils and water conditions make it unnecessary. See Standard Plans 3-501-001 through 3-501-004.

2. The perforated pipe shall be connected to the storm drain system or to an acceptable outfall.

D. Rock Selection and Placement

Rock selection and placement shall be such that there will be minimum voids and, in the exposed face, no open voids over six inches across in any direction. The final course shall have a continuous appearance and be placed to minimize erosion of the backfill material. The larger rocks shall be placed at the base of the facing so that it will be stable and have a stable appearance. The rocks shall be placed in a manner such that the longitudinal axis of the rock shall be at right angles to the face. The rocks shall have all inclined faces sloping to the back of the facing. Each course of rocks shall be seated as tightly and evenly as possible on the course beneath. The rocks shall be placed so that there are no continuous joint planes either horizontally or vertically. After setting each course of rock, all voids between the rocks shall be chinked on the back

with quarry rock to eliminate any void sufficient to pass a two-inch square probe. See Standard Plans 3-501-001 through 3-501-004.

E. Rock Filter Layers

The rock filter layer shall consist of quarry spalls with a maximum size of four inches and a minimum size of two inches. This material shall be placed to a 12-inch minimum thickness between the entire facing and the cut or fill material. The backfill material shall be placed in lifts to an elevation approximately six inches below the top of each course of rocks as they are placed, until the uppermost course is placed. Any backfill material on the bearing surface of one rock course shall be removed before setting the next course.

F. Fill Rockery Facing Supporting Roadway Embankment

Embankment behind rockeries exceeding four feet in height above the keyway shall be reinforced with a geosynthetic fabric or geogrid specifically manufactured for soil reinforcement, designed on a project specific basis by a qualified engineer, See Standard Plan 3-501-004.

G. Sidewalks above Rockery Facings

When a sidewalk is to be built over a rock facing, the top of the facing shall be sealed and leveled with a cap constructed of cement concrete Class 3000 in accordance with the applicable provisions of Section 6-02 of the WSDOT Standard Specifications, but with reduced water content resulting in slump of not over two inches. See Standard Plan 3-501-003.

H. Fences and Handrails

A chain link fence or metal handrail shall be installed when rockery is 30 inches or greater in height. See Standard Plan 3-501-001 through 3-501-008.

## 3-502 SIDE SLOPES

A. Side slopes shall generally be constructed no steeper than 4:1 on both fill slopes and cut slopes. The Public Works Director or designee may approve steeper slopes if soil analyses show that the slopes will be stable. All side slopes shall be designed per the WSDOT Design Manual Clear Zone requirements.

B. Side slopes shall be stabilized by grass sod or seeding or by other planting or surfacing materials acceptable to the Public Works Director or designee.

## 3-503 SLOPE, WALL, & DRAINAGE EASEMENTS

Either the functional classification or particular design features of a road may necessitate slope, sight distance, and wall or drainage easements beyond the right-of-way line. Such easements may be required by the Public Works Director or designee in conjunction with dedication or acquisition of right-of-way.

## 3-504 STREET TREES & LANDSCAPING

A. Street trees and landscaping should be incorporated into the design of road improvements for all classifications of roads. Such landscaping shall be coordinated with off-street landscaping required on developer's property under the provisions of City of Marysville Code. Root guard is required for street trees adjacent curb and/or sidewalk.

B. Planting strips are required along all residential access and arterial roadways designated to receive street tree treatment. Design of planting strips must be approved by the Public Works Director or designee and must include a landscaping plan in which plant maintenance, utilities and traffic safety requirements are discussed & specified. Street trees and traffic signs shall not obstruct visibility of traffic signs.

C. Existing trees and landscaping shall be preserved where desirable and placement of new trees shall be compatible with other features of the environment. In particular, maximum heights and spacing shall not conflict unduly with overhead utilities, or root development with underground utilities. If street trees are planted, they shall conform reasonably to the requirements of Standard Plan 3-504-001.

D. New trees shall not include poplar, cottonwood, soft maples, gum, any fruit bearing trees or any other tree or shrub whose roots are likely to obstruct sanitary or storm sewers. New street trees shall not be allowed to obstruct entering sight distance for intersection or driveways. Specific trees to avoid include bigleaf maple, box elder, silver maple, catalpa, London plane,

cottonwoods, weeping willows, Douglas fir, western red cedar, western hemlock, deodara cedar, spruces, and pines. See City of Marysville Code.

E. Street tree plans on bus routes shall be reviewed by Community Transit.

## 3-505 MAIL BOXES

A. The responsibilities for location and installation of mailboxes in connection with the construction or reconstruction of City streets are as follows:

1. Public Works Director or designee or his representative will:

   a. Require street improvement plans, whether for construction by the City or by a private builder, to show clearly the designated location or relocation of mailboxes.

   b. Require with this information any necessary widening or reconfiguration of sidewalks with suitable knockouts or open strips for mailbox posts or pedestal.

   c. Require these plans to bear a statement on the first sheet that mailbox locations as shown on these plans have been coordinated with the Marysville post office. This will be a prerequisite to plan approval.

   d. Require construction of mailbox locations in accordance with these plans, through usual inspection and enforcement procedures.

   e. Require vehicle turnouts for mailboxes along arterial roads or as required by the City Engineer due to public health & safety concerns per Standard Plan 3-505-002.

2. Marysville Post Office will:

   a. Designate location and manner of grouping of mailboxes when so requested by the City. Note on the plans the type of mailbox delivery: NDCBU (Neighborhood Delivery and Collection Box Unit). Authenticate by stamp or signature when the data has been correctly incorporated into the plans.

b. Do all necessary coordination with owners or residents involved to secure agreement as to mailbox location and to instruct them regarding mailbox installation.

3. Owners or residents served by mailboxes, at time of original installation, will:

   a. If using individual mailboxes, clustered or separate, install and thereafter maintain their own mailboxes as instructed by the Post Office.

4. Builders or their contractors shall:

   a. Where there are existing mailboxes and no plans to replace them with NDCBU'S: When it becomes necessary to remove or otherwise disturb existing mailboxes within the limits of any project, install the boxes temporarily in such a position that their function will not be impaired and in coordination with the Marysville Post Master. After construction work has been completed, reinstall boxes at original locations or at new approved locations as indicated on the plans or as directed by the Public Works Director or designee. Use only existing posts or materials except that any damage caused by the builder or his contractor is to be repaired at the expense of the builder.

   b. Where there are existing NDCBU's or plans to install NDCBU'S: Call Marysville Post Office for approved location.

B. Installation methods are as follows:

1. NDCBU's will be purchased and installed by the Contractor generally in accordance with Standard Plan 3-505-001.

2. NDCBU's shall be Auth-Florence Model 1570 series.

## 3-506 STREET ILLUMINATION

A. Illumination will be required on all new roadway construction.

B. Widening of arterials with existing illumination will require maintaining the illumination. Widening to the ultimate roadway width will require illumination designed to current construction practices.

C. Illumination intensity and uniformity shall conform to Table 3-5.01. Luminaire fixtures shall be consistent with fixtures maintained by the local electrical utility and the City.

D. The following luminaire fixtures or approved equals as determined by the City are required on designated City corridors:

1. Phillips Lumec Renaissances Series - color BRTX.

   a. Whiskey Ridge Master Plan Area
      i. 40th St. NE/35th ST NE Extension (SR 9 to 83rd Ave. NE)
      ii. 44th St NE (83rd Ave NE to 87th Ave NE)
      iii. 87th Ave NE (Soper Hill Rd to SR 528)

   b. Lakewood Area
      i. SR 531 (11th Ave NE to I-5)
      ii. 27th Ave NE (164th ST NE to 174th ST NE)
      iii. 25th Ave NE/23rd Ave NE (SR 531 to 181st PL NE)
      iv. All new/proposed roadways north of 156th ST, west of I-5, south of northern City Limit and east of BNSF rail line.

2. Cyclone Majesta Series Luminaire, Valmont Pole with luminaire arm and Visco S22 decorative base – color RAL 7022 TX (Umbra Grey)

   a. 116th ST NE (I-5 to State Ave.)

   b. State Ave/Smokey Point Blvd (Grove ST to northern City Limit)

3. A combination of vehicular and pedestrian scale illumination including:

   a. Cyclone Majesta Series Luminaire, Valmont Pole with luminaire arm and Visco S22 decorative base – color RAL 7022 TX (Umbra Grey)

b. Cyclone Prestige Series Pedestrian Scale Luminaire and poles – color RAL 7022 TX (Umbra Grey)

i. SR 529/State Ave (Ebey Slough to Grove ST)
ii. SR 528 (I-5 to 47th Ave NE)
iii. 1st ST (Beach Ave to Alder Ave)
iv. 2nd St (Beach to Alder Ave)
v. 3rd ST (Beach Ave to Alder Ave)
vi. Beach Ave (1st ST to 8th ST)
vii. Cedar Ave (1st ST to 8th ST)
viii. Delta Ave (1st ST to 8th ST)
ix. Columbia Ave (1st ST to 8th ST)

E. Traffic Signal Installations on SR 529/State Ave/Smokey Point Blvd shall be decorative style of color RAL 7022 TX (Umbra Grey) including:

1. Traffic Signal Mast Arm Pole Installations:

a. Ameron Marysville Type SD-II and SD-III

b. Visco S29 Decorative bases

c. Cyclone Majesta Series Luminaire (SD-III only)

2. Traffic Signal Type I, PS and PPB

a. Poles of required color

b. Visco S22 Decorative Base (except PPB pole which has no decorative base)

TABLE 3-5.01

| ROADWAY CLASSIFICATION | AREA CLASSIFICATION | | | |
|---|---|---|---|---|
| | COMMERCIAL | INDUSTRIAL | INTERMEDIATE | RESIDENTIAL |
| Minor Arterial | 2.0* | 2.0 | 1.4 | 1.0 |
| Collector Arterial | 1.2 | 0.9 | 0.9 | 0.6 |
| Neighborhood Collector | 0.9 | 0.6 | 0.6 | 0.2 |

*Average maintained horizontal illumination levels (in foot-candles).

Note: Uniformity Ratios shall meet or exceed 4:1 for light levels of 0.6 fc or more and 6:1 for light levels less than 0.6 fc.

Definitions: The terms used in this paragraph are defined as follows:

1. Average horizontal illumination: The term "average horizontal illumination" shall mean the quantity of light measured at the pavement surface and averaged over the traveled lanes expressed in foot-candles.

2. Uniformity ratio: The term "uniformity ratio" shall mean the ratio of the average horizontal illumination to the minimum point horizontal illumination at the pavement surface.

3. Roadway classification: The roadway classifications "minor arterial", "collector arterial", and "neighborhood collector" shall be as defined as designated by the City of Marysville.

4. Area classification: The area classifications "commercial", "industrial", "intermediate" and "residential" are defined as follows:

    a. Commercial: That portion of a municipality in a business development where ordinarily there are large numbers of pedestrians and a heavy demand for parking space during periods of peak traffic or a sustained high pedestrian volume and a continuously heavy demand for off-street parking space during business hours. This definition applies to densely developed business areas outside of, as well as those that are within, the central part of a municipality.

b. Industrial: That portion of a municipality in a business development, normally manufacturing, warehousing or wholesale oriented, where ordinarily there are few pedestrians and a low parking turnover, but there is a large amount of truck, multiple axle truck, and trailer traffic.

c. Intermediate: That portion of a municipality which is outside a downtown area but generally within the zone of a business or industrial development, often characterized by moderately heavy nighttime pedestrian traffic and a somewhat lower parking turnover than is found in a commercial area. This definition encompasses densely developed apartment areas, hospitals, public libraries, and neighborhood recreational centers.

d. Residential: A residential development or a mixture of residential and commercial establishments characterized by few pedestrians and a low parking demand for turnover at night. This definition includes areas with single family homes, townhouses, and/or small apartments. Regional parks, cemeteries, and vacant land are also included.

The City of Marysville shall determine the area classification for specific areas.

## 3-507 SURVEY MONUMENTS

A. All existing survey monuments, which are disturbed, lost, or destroyed due to land disturbance shall be referenced and re-established by a land surveyor registered in the State of Washington at the expense of the responsible contractor or developer.

B. Survey monuments shall be placed or replaced in accordance with recognized good practice in land surveying, and in conformance with Standard Plans 3-507-001 and 3-507-002.

C. Establishment of new monumentation will be required at the expense of the responsible contractor or developer.

## 3-508 ROADWAY BARRICADES

Temporary and permanent barricades shall conform to the standards described in Section 6F.63 of the Manual on Uniform Traffic Control Devices (MUTCD) and Standard Plan 3-508-001.

A. Type I or Type II barricades may be used when traffic is maintained through the area being constructed/reconstructed.

B. Type III barricades and/or Type IV Object Markers shall be used when roadways and/or proposed future roadways are closed to traffic. Type III barricades may extend completely across a roadway (as a fence) or from curb to curb. When Type IV Object Markers are installed a minimum of two (2)shall be placed. Where provision must be made for access of equipment and authorized vehicles, the Type III barricades may be provided with movable sections that can be closed when work is not in progress, or with indirect openings that will discourage public entry. Where job site access is provided through the Type III barricades, the developer/contractor shall assure proper closure at the end of each working day.

C. In the general case, Type III permanent barricades shall be installed to close arterials or other through streets hazardous to traffic. They shall also be used to close off lanes where tapers are not sufficiently delineated.

D. Type IV Object Markers shall be used at the end of a local access street terminating abruptly without cul-de-sac bulb or on temporarily stubbed off streets. Each such location shall include a sign stating that the road will be extended in the future.

E. Sign posts with Type IV Object Markers indicating a roadway ends shall be supplemented with retroreflective white and retroreflective red tape.

## 3-509 BOLLARDS

When necessary to deny motor vehicle access to an easement, tract, or trail, except for maintenance or emergency vehicles, the point of access shall be closed by a line of bollards. These shall include one or more fixed bollards on each side of the traveled way and removable, locking bollards across the traveled way. Spacing shall provide one bollard on centerline of trail and other bollards spaced at minimum 50 inches on center on trails 10 feet wide or less. Spacing shall be 60 inches on center on trails wider than 10 feet. Bollard design shall be in accordance

with Standard Plan 3-509-001 or other design acceptable to the Public Works Director or designee or Public Works Director or designee. No fire apparatus access roads shall be blocked in this manner without the concurrence of the Fire Marshal. Bollards shall be located at least 10 feet laterally from the paved edge of roadway.

## 3-510 GUARDRAIL/EMBANKMENT HEIGHTS

Guardrail installations shall conform to WSDOT/APWA Standard Plan C-1, Beam Guardrail Type 1 and C-2, Guardrail Placement. End anchors shall conform to WSDOT/APWA Standard Plan C-6, Beam Guardrail Anchor Type 1.

Evaluation of embankments for guardrail installations shall be in accordance with Figure 710-6 of the WSDOT Design Manual.

## 3-511 OFF-STREET PARKING SPACES

Specifications for the number and type of off-street parking spaces required shall conform to the City of Marysville Municipal Code.

## 3-512 ROADSIDE OBSTACLES

Roadside obstacles in the right-of-way shall be located so that adequate clear zones are provided.

A. Clear zone standards for roads with posted speeds of 35 mph or less shall be:

    1. 2 feet beyond the face of curb, (curb section) or

    2. 10 feet beyond the edge of traveled way (shoulder section).

B. Clear zone standards for roads with posted speeds greater than 35 mph shall comply with Chapter 7 of the WSDOT Design Manual.

1. New roadside features that could present a public hazard shall be placed outside of clear zone areas unless approved by the Engineer.

2. Existing features located inside clear zones should be relocated unless approved by the Engineer.

3. Installation of poles and other aboveground appurtenances will not be permitted in sidewalks, walkways or bikeways unless approved by the Engineer. As specified in the WSDOT Design Manual, there shall be an unobstructed vertical clearance of at least 7 feet above the surface of any sidewalk or walkway and 8 feet above any bikeway.

## 3-513 CONCRETE SIDEWALKS

A. Cement concrete, or pervious concrete sidewalks shall be required on all arterials, neighborhood collectors, local access streets, and mixed-use district, business and industrial access streets. Sidewalks shall be constructed on both sides of the roadway.

B. Sidewalks shall be constructed:

1. Next to the curbs unless planting strips are part of the design and are approved by the Public Works Director or designee as part of a landscaping plan.

2. Back of planting strips where planting strips are to be constructed,

3. At least five feet wide on residential and commercial access streets. This means five feet clear of mailboxes or other obstructions, except where approved as a variance. A variance can only be approved to a minimum width of four feet.

4. At least seven to ten feet wide:

   a. In business/commercial districts where most of the store frontage is within 80 feet of the street right-of-way.

   b. Within the curb radius returns of all arterial intersections where curb ramps are required.

c. Within designated bus zones to provide a landing area for wheel chair access to transit services.

5. With a specified width greater than eight feet when the Public Works Director or designee determines it is warranted by expected pedestrian traffic volume.

C. When Portland cement concrete, or pervious concrete sidewalks are constructed, specifications for joints shall be in accordance with Section 3-515 and Standard Plan 3-515-001.

D. See Standard Plan 3-513-001 for cement concrete, or pervious concrete sidewalk transition to asphalt shoulder.

E. Sidewalks shall not exceed maximum grade permitted for slope standards of the ADA. Reverse slope or zero slope pervious concrete sidewalks are allowed, based on site plan review.

F. Permeable pavement sidewalks in right of way shall be constructed of pervious concrete.

## 3-514 CURBS, GUTTERS AND SIDEWALKS

A. Subgrade compaction for curbs, gutters, and sidewalks shall meet a minimum 95 percent of maximum density (modified proctor). when portland cement concrete is used. If permeable pavement material is used the subgrade shall be compacted to the minimum necessary for structural stability. Two guidelines currently used to specify subgrade compaction are "firm and unyielding" (qualitative), and 90- 92% Standard Proctor (quantitative). Do not allow heavy compaction due to heavy equipment operation. The subgrade should not be subject to truck traffic.

B. Base material shall consist of 3" compacted depth crushed surfacing base course when portland cement concrete is used. If permeable pavement material is used base material shall be per section 3-404 Materials & Lay-Down Procedures.

C. Cement concrete for curbs, gutters, and sidewalks shall be Class 3000, furnished and placed in accordance with the WSDOT Standard Specifications and Standard Plans 3-514-001. Cold weather precautions as set forth in WSDOT Standard Specifications shall apply.

D. Extruded cement concrete curb shall be anchored to existing pavement by either steel tie bars or adhesive in conformance with WSDOT Standard Specification Section 8-04.

E. Extruded asphalt curbs shall be anchored by means of a tack coat of asphalt in accordance with WSDOT Standard Specification Section 8-04.

F. Existing Sidewalk Replacement shall be determined per Standard Plan 3-514-002.

G. Low Impact Flow Through Curb or approved alternate per Standard Plan 3-514-003 may be used in Low Impact Development applications and requires City Engineer or designee approval. Flow through curb designs should include a sump area when draining into a bioretention facility and provide adequate slope to ensure water drains freely through the curb.

H. Rolled curb may be installed in special circumstances such as infill with rolled curb on both sides, cul-de-sacs, and PRD's that do not allow adequate driveway spacing for vertical curb tapers. Rolled curb acceptance is on a case-by-case basis and requires City Engineer or designee approval.

## 3-515 EXPANSION AND DUMMY JOINTS

See Standard Plan 3-515-001.

A. An expansion joint consisting of 3/8" x 2-1/2" premolded joint material shall be placed around fire hydrants, poles, posts, and utility castings and along walls or structures in paved areas. Joint material shall conform to the requirements of ASTM D994 (AASHTO M33).

B, Expansion joints shall be placed in curbs, sidewalks, and driveway aprons at a minimum of 15 foot intervals and at sides of drainage inlets.

C. Dummy joints in sidewalk shall be located so as to match the joints in the curb whether sidewalk is adjacent to curb or separated by planting strip.

D. Tool marks consisting of 1/4" V-grooves shall be made in sidewalk at five-foot intervals intermediate to the expansion joints.

E. As alternative to expansion joints around structures, reinforcing bars may be embedded in concrete on four sides of structures.

F. Interface between curb and adjacent sidewalk on integral pour construction shall be formed with 1/4" radius edging tool. On separate pour construction an expansion joint consisting of 3/8" x 2-1/2" of premolded joint material shall be placed between the curb or thickened edge and the adjacent sidewalk.

## 3-516 CURB RAMPS

On all streets with vertical, ramped sections to facilitate passage of handicapped persons shall be constructed through curb and sidewalk at street intersections and other crosswalk locations. See Standard Plan 3-516-001. Where a ramp is constructed on one side of the street, a ramp shall also be provided on the opposite side of the street. Curb ramps shall be positioned so that a ramp opening is situated within the marked crosswalk or crossing area if unmarked. Curb ramps shall meet all ADA standards including maximum grade and cross-slope requirements. Curb ramps shall be designed and constructed in accordance with the latest WSDOT standard plans. Dual ramp layouts are preferred unless technically infeasible.

## 3-517 CONCRETE STEPS, METAL HANDRAIL AND HANDICAPPED ACCESS RAMPS

A. Steps shall only be used where acceptable alternative access is available for handicapped access and there is a need for a separate stairway. Where used, concrete steps shall be constructed in accordance with Standard Plan 3-501-006 or other design acceptable to the Public Works Director or designee and consistent with the WSDOT Standard Specifications. Handrails, whether for steps or other applications, shall be provided in accordance with Standard Plans 3-501-001 and the WSDOT Standard Specifications.

B. Ramps used to provide handicapped access shall be no steeper than 12:1 with a maximum rise of 30 inches between landings. Landings shall have a minimum length of five feet and

should be of sufficient width to allow wheelchairs to pass, generally five feet minimum width for two way traffic.

## 3-518 ASPHALT SHOULDERS

A. Asphalt or pervious concrete paved shoulders may be used where approved by the Public Works Director or designee on existing roads to provide for bicycle and pedestrian use and to provide continuity of design. When allowed, paved shoulders shall be placed in conformance with Sections 3-201 and 3-202. Standard Plan 3-518-001 may apply.

B. A four-inch white painted edge line shall delineate between the travel lane and shoulder.

## 3-519 SEPARATED WALKWAYS, BIKEWAYS AND TRAILS

Separated pedestrian, bicycle and equestrian trails shall be provided where designated in Marysville's Comprehensive Plan or where required by the Public Works Director or designee because of anticipated significant public usage. Separated pedestrian walkways may also be required where the local school district has identified unsafe walking conditions. Separated facilities are typically located on an easement or within the right-of-way when separated from the roadway by a drainage ditch or barrier. Where separate walkways, bikeways, or equestrian trails intersect with motorized traffic, sight distance, marking and signalization (if warranted) shall be as provided in MUTCD. Facilities shall be designed as follows:

A. Separated walkways are designed primarily for pedestrians and are typically located within the right-of-way or easement. Minimum width shall be five feet.

B. Neighborhood pathways are soft surface facilities designed for pedestrians and equestrians. Such pathways shall be a minimum four feet wide with at least one and one-half foot clearance to obstructions on both sides and 10-foot vertical clearance. Pathways shall be designed and located so as to avoid drainage and erosion problems. Pathways shall be constructed of two and one-half inches of crushed surfacing top course or wood chips over cleared native material as approved by the Public Works Director or designee.

C. Multi-purpose trails are typically designated for bicycle and pedestrian use and in general follow a right-of-way independent from any road. Multi. -Purpose trails shall be designed in accordance with the WSDOT Design Manual Section 1020.05(2) and figures 1020-13 & 1020-14.

## 3-520 BUS ZONES AND TURN-OUTS

Permit Applicants and/or Developers on bus routes are required to submit their development plans to the Community Transit Systems Planning Office and the local school district for review prior to submittal for City approval. Community Transit will determine whether transit improvements are appropriate. Improvements may vary from pedestrian accessibility improvements to provision of bus stops, either in-lane stops or pullouts.

Generally, bus pullouts will be specified if (1) Traffic and passenger boarding and departing conditions warrant: (2) Traffic flow would be greatly hindered due to in lane stopping; or (3) The posted speed limit is in excess of 35 mph.

A. Locations For Bus Pullouts

1. Placement of Bus Pullouts on the far side of signalized intersections immediately following the intersection is preferred. When no signalized intersection exists, the pullout should be placed on the far side of the intersection. Sight distance shall be determined by consulting these standards. Distance between pullouts should not be less than 1000 feet.

2. If far side pullouts are not possible, near side pullouts will be evaluated. Mid-block pullouts are generally discouraged.

3. Bus pullouts should be constructed on both sides of a two way street in a complementary pair if possible.

4. Maintaining adequate separation between access point/intersections and bus pullouts can increase the safety and efficiency of both the roadway and the transit service.

5. When locating a bus pullout in reference to existing access points or an access point in reference to an existing bus pullout, the following guidelines need to be taken into consideration:

a. A minimum distance of 105 feet, 125 feet preferred, should be maintained between the pullout and the access point on arterial roadways and a minimum of 55 feet, 75 feet preferred on non-arterial roads. This distance is measured from the edge of the access point to the front or back of the transit vehicle, whichever end is closer.

b. Driveways within the limits of a bus pullout are discouraged. Any exception to this requirement will require approval by the Engineer.

B. Design Of Bus Pullouts

Bus pullouts should be designed as depicted in Standard Drawing 3-520-001. All pullout designs must follow applicable guidelines for facilities used by the handicapped (Americans with Disabilities Act). The Community Transit Systems Planning Office should be contacted for specific design questions.

C. Other Design References

1. Chapter 1060 entitled Transit Benefit Facilities, WSDOT Design Manual.

2. A Guide to Land Use and Public Transportation for Snohomish County, Washington, prepared by the Snohomish County Transportation Authority.

## 3-521 BIKEWAYS

A. Bikeways are generally shared with other transportation modes, although they may be provided exclusively for bicycle use. Bikeways are categorized below based on degree of separation from motor vehicles and other transportation modes. This classification does not denote preference of one type over another. Bikeways are categorized as follows:

Bike Path (Class I): A separate paved, or permeable pavement, multipurpose trail for the principal use of bicycles and other non-motorized modes. Bike paths are 12 feet.

Bike Lane (Class II): A portion of the road that is designated by pavement striping for exclusive bicycle use. Bicycle lanes may be signed as part of a directional route system. Bicycle lanes are five feet wide on a curbed road and minimum four feet wide as a shoulder bike lane.

Wide Curb Lane (Class III): A road that provides a widened paved outer curb lane to accommodate bicycles in the same lane as motor vehicles. Lane width shall be increased at least three feet.

Shoulder: A lane contiguous to the traveled way but separated by a stripe. Typically shared with pedestrians and occasional emergency vehicle access.

Shared Roadway: All roads not categorized above where bicycles share the roadway with motor vehicles.

B. A bikeway shall be provided:

1. Wherever called for in the Comprehensive Plan or Capital Improvement Program.

2. When substantial bike usage is expected which would benefit from construction of a bicycle facility.

C. Striping and signing shall be implemented as follows:

1. Pavement markings shall be installed on bike lanes and paths in accordance with the MUTCD, subject to local modification.

2. The design of all signalized intersections shall consider bicycle usage and the need for bicyclists to actuate the signal.

D. The planning and design of bikeways in any category shall be in accordance with Section 1020 of the WSDOT Design Manual and the AASHTO Guide for the Development of Bicycle Facilities, current edition.

## 3-522 MEDIANS (OPTIONAL DESIGN FEATURE)

Median width shall be additional to, not part of; the specified width of traveled way. Edges shall be similar to outer road edges: either extruded or formed vertical curb; or shoulder and ditch; except that median shoulders shall be minimum four feet in width. Twenty feet of drivable surface

(which includes traveled way and paved shoulders, if any) shall be provided on either side of the median. Median may be grassed, landscaped, or surfaced with stamped Portland Cement Concrete or pavement. Median shall be designed so as not to limit turning radii or sight distance at intersections. No portion of a side street median may extend into the right-of-way for an arterial street. The Public Works Director or designee may require revisions to medians as necessary to provide for new access points and to maintain required sight distance. Non-yielding or non-breakaway structures shall not be installed in medians. Street trees and/or shrubbery may be planted in median subject to the installation of an automatic irrigation system and approval by the Public Works Director or designee and Planning Department.

## 3-523 SCHOOL ACCESS

School access required as part of development approval shall be provided by a walkway, concrete sidewalk or full width delineated shoulder unless another alternative is available and approved by the Public Works Director or designee through a road variance request.

## 3-524 EQUESTRIAN FACILITIES

A. Equestrian facilities adjacent to the traveled way shall be provided where proposed by the Comprehensive Plan or as required by the Public Works Director or designee. Facilities shall be provided as follows:

    1. Shoulders adjacent to the traveled way intended for equestrian use shall be surfaced full-width, minimum four feet with eight feet desirable, Surface shall be two and one-half inches of crushed surfacing base course and one and one-half inches of crushed surfacing top course.

    2. A separated equestrian trail shall be constructed with an 18 percent maximum grade, 10-foot vertical clearance and a five-foot wide pathway zone. The trail shall be constructed of native soil or, where drainage or erosion problems are present, a minimum of two and one-half inches of crushed surfacing top course on graded and compact native soil. Native soil, which is not free draining, shall be removed and replaced with sand or gravel as necessary to provide a maintainable and well-drained sub-grade. Additional crushed surfacing, cinders or other stabilizing materials shall be

required if heavy usage is anticipated or if there is any evidence of instability in the sub-grade; including free water, swamp conditions, fine-grained or organic soils, slides or uneven trails.

## 3-525 TRAFFIC CALMING

All new residential access streets shall have traffic calming devices. The devices may include but are not limited to neckdowns, chokers, gateways, medians, chicanes, speed tables, speed bumps, traffic circle and raised intersections.

| Device | Classification of Street | Spacing | Standard Plan |
|---|---|---|---|
| Neckdowns | Residential Access | Every intersection | 3-525-001 & 002 |
| Alternating Parking | Local Access | 300 ft. | |
| Chokers | Neighborhood Collectors | 400 ft. | 3-525-003 |
| Gateway* | Residential Access | Main Entrance to a development | 3-525-004 |
| Chicane | Local Access | mid-block | 3-525-005 |
| Speed Table | Residential Access | 400 ft. | 3-525-006 & 007 |
| Speed Bump | Local Access | 300 ft. | 3-525-008 |
| Traffic Circle | Residential Access | Every intersection | 3-525-010, 011, & 012 |

Minimum traffic calming shall include neckdowns at residential access streets intersections, alternating parking for local access streets, and chockers for neighborhood collector streets. A gateway treatment may replace the neckdown treatment at the main entrance to a development. Landscaping must be maintained by a homeowners association or responsible entity or parties including all benefited property owners.

The design and implementation of the traffic calming devices shall be approved by the Public Works Director or designee.

## 3-526 TRAFFIC SIGNAL SPECIFICATIONS

New installations, upgrades, and modifications of traffic signals within the City of Marysville shall be designed in general conformance to the current MUTCD and construction shall comply with the

latest edition of the Washington State Department of Transportation Standard Specifications for Road, Bridge, and Municipal Construction, as modified by the City. The system, at a minimum, shall include the following features:

A. 332D Style signal control cabinet with Auxiliary file and 8 inch riser.

B. 2070E signal controller with McCain 2033 software

C. When required, a master controller shall also be supplied.

D. A Battery backup system in a side mounted cabinet with switching speeds less than 8 msec.

E. All vehicle and pedestrian displays shall be LED. Pedestrian displays shall be countdown. All signal heads shall have backplates with two (2) inch reflective material installed. Backplates shall **not** be louvered.

F. All pedestrian displays and detection shall conform to ADA guidelines and for spatial separation of such installations. This normally will require two poles per corner.

G. Protected/permitted left turn phasing shall be via the four-section "flashing yellow arrow" (FYA) display. Right turn phasing shall be per the direction of the traffic engineer.

H. Dilemma zone detection shall be provided for all arterials and all approach speeds exceeding 25 mph. Circular in-pavement detector loops shall be utilized for dilemma zone detection unless otherwise approved.

I. Stopbar detection is required for all approaches via a Traficon video detection system and shall be used for all approaches having bicycle traffic. During modification of an existing signal system, detection shall be maintained on each approach phase. Stopbar video detection shall be the minimum acceptable detection standard during construction. The communications and monitoring module (ViewcomE) shall be required at all video detection locations.

J. Preemption system detection is required for all approaches. Equipment shall be Opticom. Sensors shall be model 721 and discriminators shall be Model 764.

K. All approach directions shall have overhead street name signs having a white border, rounded corners, and a letter size that is MUTCD compliant.

L. All signalized intersections shall be illuminated.

M. Long range planning and operational needs require that all arterials be served by communications conduit for the length of the arterial. All frontage improvements should consult with the City to check for conduit installation requirements.

N. Communication is required for all signals back to a central monitoring and operating system. Communications equipment and infrastructure may be required.

O. Traffic signal poles may be required to include decorative elements. See Section 3-506 for required locations and standards.

## 3-527 GUARDRAILS

Evaluation, design and installation of guardrails shall be in accordance with the WSDOT Design Manual, the AASHTO Roadside Design Guide and WSDOT/APWA Standard Plans.

## BRIDGES

### 3-600 BRIDGES

### 3-601 PRINCIPAL REFERENCES

Except as specified below, City of Marysville bridges, whether on public roads or on private roads serving subdivided land, shall be designed and constructed to meet the minimum requirements set forth in the latest edition, including all interim addenda, of "Standard Specifications for Highway Bridges," adopted by AASHTO and in accordance with the requirements of WSDOT Standard Specifications. Bridge and approach railings shall be provided in accordance with those references or with WSDOT/APWA Standard Plans. All new bridges shall be designed to carry an AASHTO HS 20-44 live load or greater. All bridgework shall comply with City Codes regarding sensitive and shoreline management areas for stream and wetland protection and flooding concerns.

### 3-602 BRIDGE GEOMETRICS

A. In the general case, the bridge shall comprise the full width and configuration of the road being served -- traveled way plus curb, sidewalks, walkway, bike lane, equestrian lane and/or shoulder on one or both sides. Requirements of utilities shall be duly considered. Bridge roadway width shall be measured between curbs or between faces of rails, whichever is less, but in no case shall be less than 28 feet.

B. Where typical speed is 35 MPH or higher-and significant pedestrian, bike and/or horseback traffic can be expected, the Public Works Director or designee may require that the lanes for these other modes of traffic be separated from motor vehicle traffic by use of a bridge traffic rail and further protected by a rail at outer edge. On designated bike routes, combination traffic and bicycle railings shall be used.

C. Approach railings shall be made structurally continuous with bridge railings and shall meet AASHTO specifications as cited in Section 3-510 above.

D. Overhead vertical clearances for motor traffic on the traveled way or under overpasses shall be 16.5 feet minimum. Vertical clearance of structures above a walkway or sidewalk shall be 8 feet minimum and shall be 10 feet on designated equestrian routes.

E. The height of bridge clearance above streams shall be as required by the Surface Water Design Manual.

## 3-603 BRIDGE DESIGN CRITERIA

A. Approach slabs Will be required for all bridges and new bridge plans shall provide pavement seats for approach slabs unless otherwise approved by the Public Works Director or designee. Waiver or modification of the requirement for approach slabs will be considered only on the basis of adequate geotechnical analysis. Approach slabs shall be constructed in accordance with WSDOT/APWA Standard Plan A-2,

B. New bridge decks and approach slabs shall be designed with a protective system to prevent corrosion of the reinforcing steel.

C. Criteria under other recognized road and bridge project classifications, such as those of 3-R projects, set forth in WSDOT Local Agency Guidelines, may be applied under conditions deemed appropriate by the Public Works Director or designee.

D. The design of bridge expansion joints shall consider the presence of bicycle traffic.

## 3-604 SPECIAL PERMITS

Permit requirements for construction or reconstruction of bridges include but are not limited to the following:

A. Bridges over navigable waters require U. S. Coast Guard permits.

B. Bridges involving deposition of material in waters of the United States or their adjacent wetlands require an U. S. Army Corps of Engineers Permit.

C. Any work involving alteration of flow or bed materials below the ordinary high water line of any water body or water course requires a-Hydraulic Project approval from the State Department of Fisheries or the State Department of Wildlife.

D. Any work within waters of the State requires a Water Quality Certification Waiver from the State Department of Ecology.

E. Where bridge structures lie on or over submerged lands a lease from the Washington State Department of Natural Resources may be necessary,

F. Structures located on shoreline zones as defined in City of Marysville Code require a substantial development permit from the City subject to concurrence of the State Department of Ecology.

G. Bridges over waterways require the Public Works Director or designee's approval of the size and shape of the hydraulic opening, the height of the superstructure over high water, the location of piers, channel, improvement, and other hydraulic considerations.

## 3-700 UTILITIES

## 3-701 FRANCHISING POLICY AND PERMIT PROCEDURE

A. Utilities to be located within existing and proposed City road right-of-way shall be constructed in accordance with current franchise and/or permit procedure and in compliance with these Standards. In their use of the right-of-way, utilities will be given consideration in concert with the traffic carrying requirements of the road which are, namely, to provide safe, efficient and convenient passage for motor vehicles, pedestrians, and other transportation uses. Aesthetics shall be a consideration. As a matter of policy, undergrounding of electric utilities will be required except in Old Town Marysville. Also, utilities are subject to City policies relating to drainage, erosion/sedimentation control and sensitive areas as set forth in City Codes and the Storm Drainage Design Standards.

B. All permits for new placement and replacement of existing utility poles and other utility structures above grade shall be accompanied by written certification from a professional Engineer or from an agent authorized by the utility to certify that the installations conform to these Standards and that the proposed work is in conformity with sound engineering principles relating to highway safety.

C. Requests for exceptions to these Standards will be processed in accordance with variance procedure as referenced in Section 3-107.

## 3-702 STANDARD UTILITY LOCATIONS WITHIN THE RIGHT-OF-WAY

Utilities within the right-of-way on new roads or on roads where existing topography, utilities or storm drains are not in conflict, shall be located as indicated below. Where existing utilities or storm drains are in place, new utilities shall conform to these Standards as nearly as practicable and yet be compatible with the existing installations. Above ground utilities located within intersections shall be placed so as to avoid conflict with placement of curb ramps.

A. Gas and Water Lines:

1. Shoulder-and-Ditch Section:
   If practical: Outside of ditch line.
   Otherwise: In shoulder three feet from edge of traveled lane.

2. Curb and Gutter Section:
   Preferable: One and one-half feet back of curb, or at distance which will clear root masses of street trees if these are present or anticipated.
   Otherwise: In the street as close to the curb without encroaching on the storm drainage system. Mains and service connections to all lots shall be completed prior to placing of surface materials.

3. Designated Side of Centerline:
   GAS: South and West.
   WATER: North and East.

4. Depth: 42 inches minimum cover from finished grade, ditch bottom or natural ground.

B. Individual water service lines shall:

1. Be placed with minimum 36-inch cover from finished grade, ditch bottom or natural ground.

2. Use road right-of-way only as necessary to make side connections,

3. For any one connection, not extend more than 60 feet along or through the right-of-way, or the minimum width of the existing right-of-way.

4. Water meter boxes, when placed or re-placed, shall be located on the right-of-way line immediately adjacent to the property being served, unless otherwise approved by the Public Works Director or designee. Meter box locations within the right-of-way may be approved by the Public Works Director or designee based on site conditions, which make routine, service access difficult or impractical,

C. Sanitary Sewers: In the general case, five feet south and west of centerline; depth 60-inch minimum cover from finished grade, ditch bottom or natural ground.

D. In the case of individual sanitary sewer service lines, which are force mains, the pipe shall:

1. Is minimum four inches D.I., or as required by the utility to maintain internal scouring velocity.

2. If nonmetallic, contain wire or other acceptable proximity detection features; or be placed in a cast iron or other acceptable metal casing.

3. Be placed with minimum three-foot cover from finished grade, ditch bottom or natural ground, within 10 degrees of perpendicular to road centerline, and extend to right-of-way line,

4. Be jacked or bored under road unless otherwise approved by the Public Works Director or designee,

E. Sanitary and water lines shall be separated in accordance with good engineering practice such as the Criteria for Sewage Work Design, Washington Department of Ecology, latest edition.

F. Gravity systems, whether sanitary or storm drainage, shall have precedence over other systems in planning and installation except where a non-gravity system has already been installed under previous approved permit and subject to applicable provisions of such permits or franchises.

G. Electric utilities, power, telephone, cable TV: Preferable: Underground with 36 inch minimum cover, either side of road, at plan location and depth compatible with other utilities and storm drains. Otherwise: Every new placement and every replacement of existing utility poles and other utility structures above grade shall conform to the following:

1. Utility poles or other obstacles may be placed within the right-of-way and shall be as far back from the traveled way or auxiliary lane as practicable. The utility pole shall be placed outside of the clear zone per the WSDOT Design Manual.

I. Notwithstanding the other provisions regarding pole locations described in these standards, no pole shall be located so that it poses a hazard to the general public. Utilities shall place and replace poles with primary consideration given to public safety.

1. The above constraints on pole and obstacle location will not apply to locations not accessible by moving vehicles, "breakaway" structures whose break-off resistance does not exceed that of 4" x 4" wood post or a 1-1/2-inch standard (hollow) iron pipe or to "breakaway" fire hydrants installed to manufacturer's specifications,

2. Deviations from these pole and obstacle clearance criteria may be allowed by an approved variance when justified by suitable engineering study considering traffic safety. Only the Utility may request a variance from pole and obstacle clearance criteria. Up to three contiguous damaged or weakened poles may be replaced at existing locations under permit in accordance with emergency procedures, however, sequential permits resulting in continuous replacement of a pole line shall not be allowed. A pole or other obstacle, which incurs repeated damage from errant vehicles, shall be relocated or protected.

3. Locations of poles shall also be compatible with driveways, intersections, and other road features (i.e., they shall not interfere with sight distances, road signing, traffic signals, culverts, etc.). To the extent possible, utilities shall share facilities so that a minimum number of poles are needed.

4. Where road uses leave insufficient overhang, anchor, and tree-trimming space for overhead utilities, consideration will be given to variance from the Standards or to acquisition of additional easements and/or right-of-way for this purpose. Costs incurred for said acquisition shall be borne by the developer, builder, or other party initiating the road construction. However, the associated cost of relocating the utility shall not be borne by the City of Marysville.

I. Notwithstanding other provisions, underground systems shall be located at least five feet away from road centerline and where they will not otherwise disturb existing survey monumentation.

## 3-703 <u>UNDERGROUND UTILITY INSTALLATION</u>

A. General: The WSDOT Standard Specifications will generally apply unless otherwise stated below.

B. Utility Cuts On Existing Traveled Roads

1. General Policy

- Trench restoration guidelines ensure that the conditions of the pavement of existing and new public streets are not degraded by trenching and restoration activities. These guidelines shall be followed by City departments, utility companies and contractors when doing trench work within the paved portion of City right of way.
- Modifications or exemptions to these policies may be authorized by the Public Works Director or designee per section 3-107 of these standards.
- Whenever a new street is completed or an overlay of an existing street has been completed within five (5) years of a newly proposed cut, additional roadway restoration shall be required as determined by the Public Works Director or designee.
- Pavement trenching may be allowed, under compelling circumstances, provided a more reasonable alternative does not exist.
- Boring under the roadway shall be by a guided boring equipment. A boring mole will not be allowed.
- A Development Standard Handout is attached in Appendix C.

2. Policy

Overlay is required

- On all streets with a pavement condition index of greater than 80 a full street width or lane width overlay is required.
- On all streets with a pavement condition index between 70 and 80 a full street or lane width overlay may be required based on the location of the trench work. If any part of the trench or trench edge falls within the standard vehicle wheel path (seven feet eight inches centered within the lane, see standard drawings 3-703-001 and 3-703-002 then an overlay will be required.

No Overlay is required

- On all streets with a pavement condition index of less than 70, trench restoration per the standard plans is required.

3. Trench Restoration

Longitudinal Cut

- Trench restoration shall be per standard plan 3-703-002

Transverse Cut

- Trench restoration shall be per standard plan 3-703-003.

4. General Information

Inspection

The City inspectors may determine in the field that a full street width or lane width overlay be required due to changes in the permit conditions such as the following:

- Trenches needed to be relocated in the field because of existing utilities.
- Additional damage to existing asphalt surface due to the contractor's equipment.
- The trench width increases significantly.
- Significant problems that were not expected or are discovered during the construction.

Overlay

- Lane width or a full street width overlay will be determined based on the location of the proposed trench within the roadway cross-section.

a. If the trenching is down the middle of a single lane then a lane width overlay will be required.
b. If the trenching is down the middle of the roadway a full width overlay will be required.
c. If the trenching is down the middle of two lanes in the same direction or is within three feet of any lane then the lanes affected will be overlaid.

- All existing pavement shall receive a 2" grinding prior to the overlay.
- All overlays shall extend 10 feet beyond the edge of the trench.

New Streets and Recent Overlay

- Whenever a new street is accepted from a developer or a new overlay has been completed within five (5) years of a newly proposed cut (non-emergency), additional roadway restoration shall be required as determined by the Public Works Director or designee.
- In the event of an emergency, pavement excavation may be allowed provided a more reasonable alternative does not exist and restoration of the pavement complies with one of three options described below:

a. Option 1: This option applies to street crossings and/or longitudinal trenches and requires the grinding down of existing pavement and overlay of the entire roadway or vehicle lane impacted by the trenching.
Once the trench work is completed and the trench restored per the standard plan, the entire roadway will be ground down to a depth of 2.0 inches between adjacent intersections and a 2 inch overlay of 1/2" HMA applied per City Standards.
b. Option 2: This option applies to street crossings and/or longitudinal trenches where a partial grinding and complete overlay can be substituted for Option 1. Once the trench work is completed and the trench restored the outside lanes can be ground to width of six (6) feet from the curb for a depth of 2.0 inches between adjacent intersections and a 2.0 inch overlay of 1/2" HMA applied to the entire roadway surface per City Standards.

C. On Proposed Roads (e.g., New Subdivisions): Backfill compaction for trenches within the roadway shall be achieved throughout the entire depth of the trench, by mechanical compaction as described above.

D. Controlled Density Backfill:

As an alternative to mechanical compaction, trench backfill above the bedding and below the base course or ATB may be accomplished by use of controlled density backfill (CDF) in a design mixture approved by the Public Works Director or designee. On crossings required to be opened to traffic prior to final trench restoration, steel plates may be used-as approved by the Public Works Director or designee.

E. Testing:

1. Consistent with the above and prior to placing any surface materials on the roadway, it shall be the responsibility of the developer to provide density test reports certified by a professional Engineer. A minimum of one test shall be taken within every 50 feet of trench length and at depths up to 50 percent of trench depth, or as directed by the Public Works Director or designee. Compaction of laterals or service line trenches shall be tested where directed by the Public Works Director or designee. Testing of CDF shall be in accordance with ASTM D4832.

2. Whichever compaction method the installer elects, the backfill below four feet must test to be not less than 90 percent maximum density (modified proctor) and the upper four feet of backfill must test not less than 95 percent maximum density (modified proctor). Where this cannot be achieved, all affected backfill in the top four feet shall be removed and replaced by gravel base and mechanically compacted to 95 percent as in B.2 above.

F. Notification and Inspection:

1. Consistent with these Standards, any developers, utilities, or others intending to trench in existing or proposed traveled City streets shall notify City of Marysville Public Works Inspection office not less than one working day prior to doing the work. This notification shall include:

    a. Location of the work
    b. Method of compaction to be used
    c. Day and hour when compaction is to be done
    d. Day and hour when testing is to be done.

2. As set forth in these Standards, failure to notify may necessitate testing or retesting by City of Marysville at the expense of the Developer or Utility. Furthermore, the work may be suspended pending satisfactory test results.

## 3-704 FINAL UTILITY ADJUSTMENT (TO FINISH GRADE)

A. All utility covers, which are located on proposed asphalt roadways, shall be temporarily placed at subgrade elevation prior to placing crushed surfacing material.

B. Final adjustment of all covers and access entries shall be made following final paving by:

1. Saw-cutting or neat-line jack hammering of the pavement around lids and covers. Opening should not be larger than 12 inches beyond the radius of the cover.

2. Removing base material, surfacing course, and frame; adding raising bricks; replacing frame and cover no higher than finished grade of pavement and no lower than one-half inch below the pavement.

3. Filling and mechanically compacting around the structure and frame with crushed surfacing material or ATB, or pouring in five-inch minimum thickness of cement concrete Class 3000 to within two inches of the top.

4. Filling the remaining two inches with 1/2" HMA hot mix, compacted and sealed to provide a dense, uniform surface.

5. Final adjustment of all covers and access entries shall be completed within 30 days of final paving.

## 3-705 FINAL CLEANUP AND RESTORATION

In addition to restoration of the road as described above, the responsible utility shall care for adjacent areas in compliance with these standards and section 8-01 in the WSDOT Standard Specifications. In particular:

A. Streets and roads shall be cleaned and swept both during and after the installation work. No blading of asphalt streets will be permitted.

B. Disturbed soils shall be final graded, seeded and mulched after installation of utility. In limited areas seeding and mulching by hand, using approved methods, will be acceptable.

C. Ditch lines with erodible soil and subject to rapid flows may require seeding, jute matting, netting, or rock lining to control erosion.

D. Any silting of downstream drainage facilities, whether ditches or pipe and catch basins, which results from the utility installation shall be cleaned out and the work site restored to a stable condition as part of site cleanup.

## CONSTRUCTION

### 3-800 CONSTRUCTION CONTROL AND INSPECTION

### 3-801 BASIS FOR CONTROL OF THE WORK

A. Work performed in the construction or improvement of City streets, whether by or for a private developer or by City contractor, shall be done in accordance with these Standards and approved plans and specifications. It is emphasized that no work may be started until such plans are approved. The Public Works Director or designee shall approve any revision to such plans before being implemented.

B. The Public Works Director or designee will have authority to enforce the Standards as well as other referenced or pertinent specifications. The Public Works Director or designee will appoint project engineers, assistants, and inspectors as necessary to inspect the work and they will exercise such authority as the Public Works Director or designee may delegate.

Provisions of Section 1-05 of the WSDOT Standard Specifications shall apply, with the term "Public Works Director or designee" therein construed to be the Public Works Director or designee.

### 3-802 SUBDIVISION, COMMERCIAL AND RIGHT-OF-WAY INSPECTION

On all road and drainage facility construction, proposed or in progress, which relates to subdivision, commercial and right-of-way development, City of Marysville Public Works will do control and inspection. Unless otherwise instructed by the Public Works Director or designee, construction events which require monitoring or inspections by Public Works are identified as follows, with prior notification to Public Works (telephone 360-363-8100):

A. Preconstruction Conference: Three working days prior notice. Conference must precede the beginning of construction and include contractor, designing Engineer, utilities, and other parties affected. Plan approvals and permits must be in hand prior to the conference.

B. Clearing and Temporary Erosion/Sedimentation Control: One working day notice prior to initial site work involving drainage and installation of temporary water retention/detention and siltation control. Such work to be in accordance with the approved plans.

C. Utility and Storm-Drainage Installation: One working day notice prior to trenching and placing of storm sewers and underground utilities such as sanitary, water, gas, power, telephone, and TV lines.

D. Utility and Storm Drainage Backfill and Compaction: One working day notice before backfill and compaction of storm sewers and underground utilities.

E. Subgrade Completion. One working day notice at stage that underground utilities and roadway grading are complete, to include placement of gravel base if required. Inspection to include compaction tests and certifications described in these standards.

F. Curb and Sidewalk Forming: One working day notice to verify proper forming and preparation prior to pouring material.

G. Curb and Sidewalk Placement: One working day notice to check placement of material.

H. Crushed Surfacing Placement: One working day notice to check placement and compaction of crushed surfacing base course and top course.

I. Paving: Three working days notice in advance of paving with asphalt, Portland cement concrete, or permeable pavement.

J. Structural: Three working days notice prior to each of critical stages such as placing foundation piling or footings, placement and assembly of major components, and completion of structure and approaches. Tests and certification requirements will be as directed by the Public Works Director or designee.

K. Final Construction Inspection: 15 working days prior to overall check of road or drainage project site, to include completion of paving and associated appurtenances and improvements, cleaning of drainage system, verification of infiltration rates by a licensed geotechinacl engineer or other qualified personnel and all necessary clean-up. Prior to approval of construction work, acceptance for maintenance and release of construction

performance bonds, the developer/contractor shall pay any required fees, submit any required maintenance and defect financial guarantees, provide a certificate of monumentation and submit one photo mylar or ink-on-mylar set and sets of blue line final, corrected plans (record drawing) reflecting all minor and design plan changes of the road and drainage systems.

L. Final Maintenance Inspection: 30 days prior to the end of the maintenance period, Prior to release of the maintenance guarantee, there shall be successful completion of the maintenance period, verification of infiltration rates by a licensed geotechnical engineer or other qualified personnel, repair of any failed facilities and the payment of any outstanding fees.

## 3-803 PENALTIES FOR FAILURE TO NOTIFY FOR INSPECTION

Timely notification by the developer as noted above is essential for the City to verify through inspection that the work meets the standard. Failure to notify in time may oblige the City to arrange appropriate sampling and testing after-the-fact, with certification by a professional Engineer. Costs of such testing and certification shall be borne by the developer. At the time that such action is directed by the Public Works Director or designee, the Public Works Director or designee may prohibit or limit further work on the development until all directed tests have been completed and corrections made to the satisfaction of the Public Works Director or designee. If necessary, the City may take further action as set forth in the municipal code.

## 3-804 EMBANKMENT CONSTRUCTION CONTROL IN DEVELOPMENTS

The provisions of Section 2-03 of the WSDOT Standard Specifications apply in all respects to development construction unless otherwise instructed by the Public Works Director or designee. The following elements are mentioned for clarification and emphasis:

A. Embankment and Cut Section Compaction:
Compaction of the top two feet of fill subgrade and top six inches of cut subgrade shall meet a minimum 95 percent of maximum density in accordance with WSDOT Standard Specifications Section 2-03.3(14) C - Method B. Subgrade fill below the top two feet shall be compacted to 90 percent of maximum density.

B. Testing for Density

1. Prior to placing any surfacing material on the roadway, it will be the responsibility of the developer/contractor to provide density test reports reviewed and approved by a professional Engineer. Optimum moisture content and maximum density shall be determined by methods cited in Section 2-03.3(14) D of WSDOT Standard Specifications or by other test procedures approved by the Public Works Director or designee. In fill sections, a minimum of one test shall be taken for every 1,000 cubic yards or fraction thereof and on each lift of embankment. In cut sections, the interval shall be every 100 feet of roadway. For work to be accepted tests must show consistent uniform density as required by tests referenced above.

2. In cases where tests do not meet the minimum standard, corrective action shall be taken such as adding water, aerating, replacing material or applying more compactive effort as directed by the developer's Engineer. Retests shall show passing densities prior to placing the next lift of subgrade fill.

3. For trenching in existing roads, see these standards.

C. Finishing Subgrade

After the subgrade preparation has been completed, it shall be thoroughly checked by the developer/contractor using a level, string line, crown board, or other means to determine that the subgrade conforms to the typical section or special plan conditions prior to placing any surfacing material,

## 3-805 TRAFFIC CONTROL IN DEVELOPMENT CONSTRUCTION

A. Interim Traffic Control: The developer/contractor shall be responsible for interim traffic control during construction on or along traveled City roads. When road or drainage work is to be performed on City roads that are open to traffic, the developer/contractor will be required to submit a traffic control plan for approval by the Public Works Director or designee prior to beginning the work. Traffic control shall follow the guidelines of Section 1-07.23 of the WSDOT Standard Specifications. All barricades, signs and flagging shall conform to the requirements of the MUTCD Manual. For more specific requirements for barricades, see Section 3-508 and

Standard Plan 3-508-001. Signs must be legible and visible and should be removed at the end of each workday if not applicable after construction hours.

B. Temporary Road Closures and Detours: When temporary road closures cannot be avoided, the developer/contractor shall post "To Be Closed" signs a minimum of five days prior to the closing. The types and locations of the signs shall be shown on a detour plan. A detour plan must be prepared and submitted to the Public Works Director or designee at least 10 working days in advance, and approved prior to closing any City street. In addition, the developer/contractor must notify, in writing, local fire, school, law enforcement authorities, Metro transit, and any other affected persons as directed by the Public Works Director or designee at least five days prior to closing.

C. Haul Routes: If the construction of a proposed development is determined by the Public Works Director or designee to require special routing of large trucks or heavy construction equipment to prevent impacts to surrounding roads, residences or businesses, the developer/contractor shall be required to develop and use an approved haul route.

When required, the haul route plan must be prepared and submitted to the Public Works Director or designee and approved prior to beginning or continuing construction. The haul route plan shall address routing, hours of operation, signage and flagging, and daily maintenance.

If the developer/contractor's traffic fails to use the designated haul route, the Public Works Director or designee may prohibit or limit further work on the development until such time as the requirements of the haul route are complied with,

D. Haul Road Agreement: When identified as a need by the SEPA review process or by the Public Works Director or designee, a haul road agreement shall be obtained by the franchised utility, developer or property owner establishing restoration procedures to be performed upon completion of the haul operation,

## 3-806 CITY FORCES AND CITY CONTRACT ROAD INSPECTION

Road construction performed by City forces or by contract for the City will be inspected under the supervision of the Public Works Director or designee.

## 3-807 CALL BEFORE YOU DIG

Builders are responsible for timely notification of utilities in advance of any construction in right-of-way or utility easements. The utility One-Call Center phone number 1-800-424-5555 should be prominently displayed on the work site.

## 3-808 PERMEABLE PAVEMENT ACCEPTANCE INFILTRATION TEST

Contractor shall have a geotechnical engineer or other qualified personnel, conduct infiltration tests on finished permeable pavement. The City Engineer or designee may request to choose the testing locations if site conditions are not uniform. Newly-placed permeable pavement shall have a minimum infiltration rate of 100 inches/hour. Infiltration tests shall be completed every 150 linear feet of roadway and conducted in accordance with ASTM C1701. If the measured infiltration rate is less than 100 inches/hour, the geotechnical engineer or qualified personnel shall conduct an additional four infiltration tests in line with the paver direction of travel. Two tests upstream and two tests downstream of the initial test locations shall be taken at distances of 20 feet and 40 feet. Results of the additional tests will be averaged. The geotechnical engineer or qualified personnel shall conduct additional testing upstream and downstream to identify area to be removed. If the average infiltration rate is less than required remove and replace the failing section at the direction of the Engineer.

## APPENDIX A

### *PRINCIPAL, MINOR, AND COLLECTOR ARTERIAL LANE CONFIGURATION*

| Arterial Classification | Name | Number Of Lanes | Bicycle Lane (5 feet) | Streetscape [1] | Right Of Way Width (feet) [2] |
|---|---|---|---|---|---|
| **Principal** | | | | | |
| East/West | | | | | |
| | SR 92 Extension (35th/40th St): 83rd Ave to SR 9 | 5 | No | Yes | 80 |
| | SR 528: I-5 to SR 9 | 5 | No | Yes | 80 |
| | 88th St: I-5 to State Ave | 5 | No | Yes | 80 |
| | SR 531: City Limits to City Limits* | 5 | Yes | Yes | 100 |
| | 84th St: 83rd Ave to SR 9 | 5 | Yes | Yes | 90 |
| | 156th St. NE: City Limits to City Limits | 5 | No | Yes | 90 |
| | 116th St: I-5 to State Ave | 5 | No | Yes | 80 |
| | Sunnyside Blvd: 47th Ave to 60th Dr | 5 | Yes | Yes | 90 |
| North/South | | | | | |
| | 27th Ave.: SR 531 to Twin Lakes Blvd | 5 | No | Yes | 80 |
| | State Ave: Ebey to 136th St. NE | 5 | No | Yes | 80 |
| | Smokey Point Blvd: 136th St. NE to City Limits | 5 | Yes | Yes | 90 |
| | 51st Ave NE: 1400' S. of 152nd St. NE to 172nd St. NE | 5 | Yes | Varies | 80-90 |
| | | | | | |
| **Minor** | | | | | |
| East/West | | | | | |
| | 1st St: Cedar Ave to State Ave | 3 | Yes | No | 60 |
| | 3rd St: State Ave to 47th Ave | 3 | Yes | Yes | 70 |
| | 40th St: Sunnyside to 83rd Ave | 3 | No | Yes | 60 |
| | 44th St: 83rd to SR 9 | 3 | No | Yes | 60 |
| | 52nd St: Sunnyside to 75th Ave | 3 | Yes | No | 60 |
| | 80th St: Cedar Ave to State Ave | 3 | Yes | No | 60 |
| | 84th St: 67th Ave to 83rd Ave | 3 | No | Yes | 70 |
| | 88th St: State Ave to 83rd Ave | 3 | Yes | Yes | 70 |
| | 136th St NE: I-5 to City Limits | 3 | Yes | No | 60 |
| | 152nd St NE: State Ave to City Limits | 3 | Yes | Yes | 70 |
| | 164th St: 27th Ave to Twin Lakes Blvd | 3 | No | Yes | 60 |
| | 169th St: 27th Ave to Twin Lakes Blvd | 3 | No | Yes | 60 |
| | Grove St: Cedar to 67th Ave | 3 | Yes | No | 60 |
| | Soper Hill Rd: Sunnyside Blvd to SR 9 | 3 | Yes | Yes | 70 |
| | Sunnyside Blvd: State Ave to 47th Ave | 3 | Yes | Yes | 70 |
| | Sunnyside Blvd: 60th Dr to Soper Hill Rd | 3 | Yes | Yes | 70 |
| | Twin Lakes Blvd: 27th Ave to 156th St | 3 | No | Yes | 60 |
| North/South | | | | | |
| | 27th Ave: 171st PL to 169th St | 4 | No | Yes | 70 |
| | 27th Ave: 169th St to 164th St | 3 | No | Yes | 60 |
| | 47th Ave: 3rd St to Armar Rd | 3 | Yes | No | 60 |
| | 51st Ave NE: Armar Rd to 1400' S. of 152nd St. NE | 3 | Yes | No | 60 |

| | | | | | |
|---|---|---|---|---|---|
| | 67th Ave: 44th St to 172nd St | 3 | Yes | Yes | 70 |
| | 67th/71st Connection: 40th to 44th | 3 | Yes | Yes | 70 |
| | 71st Ave: Soper Hill Rd to 40th St | 3 | Yes | Yes | 70 |
| | 83rd Ave. NE: SR 528 to 84th St | 3 | Yes | No | 60 |
| | 83rd Ave NE: Soper Hill Rd to SR 528 | 3 | Yes | Yes | 70 |
| | Armar Road: 47th Ave to 51st Ave | 3 | Yes | No | 60 |
| | Cedar Ave: 1st St to 80th St | 4 | Yes | No | 75 |

| | | | | | |
|---|---|---|---|---|---|
| | | | | | |

| Arterial Classification | Name | Number Of Lanes [4] | Bicycle Lane (5 feet) | Streetscape [1] | Right Of Way Width (feet) [2] |
|---|---|---|---|---|---|
| **Collector** | | | | | |
| East/West | | | | | |
| | 1st St: Ash Ave to Cedar Ave | 2 | Yes | No | 60 |
| | 2nd St: State Ave to 47th Ave | 2 | No | No | 60 |
| | 3rd St: Ash Ave to Beech Ave | 2 | Yes | Yes | 70 |
| | 5th St: Ash Ave to Beech Ave | 2 | No | No | 60 |
| | 8th St: Ash Ave to 47th Ave | 2 | Yes | No | 60 |
| | 44th St: 67th Ave to 83rd Ave | 2 | Yes | No | 60 |
| | 76th St: State Ave to 47th Ave | 2 | No | No | 60 |
| | 80th St: State Ave to 51st Ave | 2 | Yes | No | 60 |
| | 84th St: State Ave to City Limits | 2 | No | No | 60 |
| | 100th St NE: State Ave to 76th Ave | 2 | Yes | No | 65 |
| | 108th St: 51st Ave to 67th Ave | 2 | Yes | No | 60 |
| | 116th St: State Ave to 44th Dr | 2 | No | Yes | 60 |
| | 132nd St: 51st Ave to 67th Ave | 2 | Yes | No | 60 |
| | 164th St: 22nd Ave to 27th Ave | 2 | No | Yes | 60 |
| | 169th St: 19th Ave to 27th Ave | 2 | No | Yes | 60 |
| | Grove St: Ash Ave to Cedar Ave | 2 | Yes | No | 60 |
| | Grove St: 67th Ave to 83rd Ave | 3 | Yes | Yes | 75 |
| North/South | | | | | |
| | 19th Ave: SR 531 to 169th St | 2 | No | Yes | 60 |
| | 22nd Ave: SR 531 to 164th St | 2 | No | Yes | 60 |
| | 22nd Ave Extension: 164th St to 136th St | 2 | No | Yes | 60 |
| | 25th Ave: SR 531 to 164th St | 2 | No | Yes | 60 |
| | 47th Ave: 2nd St to 3rd St | 3 | No | No | 75 |
| | 47th Ave: Armar Rd to 84th St | 2 | Yes | No | 60 |
| | 48th Dr: City Limits to 100th St | 2 | No | No | 60 |
| | 79th Ave Soper Hill Rd to 40th St | 2 | No | No | 60 |
| | 83rd Ave: 84th St to 96th St | 2 | No | Yes | 60 |
| | 87th Ave: SR 528 Rd to 84th St** | 2 | No | Yes | 55 |
| | 87th Ave: 84th St to 96th St | 2 | No | Yes | 60 |
| | 87th Ave: Soper Hill Rd to SR 528 | 2 | No | Yes | 60 |
| | Ash Ave: 1st St to 3rd St | 1 | No | No | 55 |
| | Ash Ave: 5th St to Grove St | 2 | No | Yes | 65 |
| | Beach Ave: 1st St to Short St | 3 | Yes | Yes | 75 |
| | Short St: Beach Ave to Cedar Ave | 3 | Yes | Yes | 75 |
| | Shoultes Rd: 100th St to 108th St | 2 | No | No | 60 |

* SR 531 is to be constructed with Medians in place of two-way left turn lanes.

** Collector Arterial built to Neighborhood Collector Standard

1. 5 foot planter strip between the back of curb and sidewalk. If within downtown core tree wells with grates may be substituted.
2. Right of way width may be increased as determined by the Public Works Director or designee
3. See Standard Plans 3-201-001 and 3-201-002
4. Collector Arterial shall be striped with a left turn pocket and removal of parking at roadway intersections.

## Appendix B

***DEVELOPMENT STANDARD HANDOUT***

Trench Backfill and Restoration

A. Materials and workmanship shall be in conformance with the WSDOT Standard Specifications for Road, Bridge, and Municipal Construction. Construction shall be in conformance with Standard Plans 3-703-001 through 3-703-003, with the details and conditions outlined in the Right-of-Way Use Permit, and with the following:

(1) Trench restoration shall be accomplished with a patch or an overlay as required by the City Engineer.

(2) If a patch is used, the trench limits shall be sawcut prior to final patch.

(3) All trench and pavement cuts shall be made by sawcuts or by grinding. The sawcuts or grinding shall be a minimum of 1 foot outside the trench width or as directed by the city inspector.

(4) If the Right-of-Way Use Permit requires an overlay, then the contractor may use a jackhammer or drum grinder for the cutting of the existing pavement.

(5) Within the top 4 feet of trenching, backfill shall be crushed surfacing materials or a controlled-density fill.

(6) If the existing material is determined by the City Inspector to be suitable for backfill and the trench is not perpendicular to a travel lane or driveway, the contractor may use the native material as long as the top 8 inches is crushed surfacing material.

(7) Material used for backfill below 4 feet in depth must be approved by the City Inspector.

(8) All trench backfill shall be compacted to 95% maximum density, as described in Section 2-03 of the Standard Specifications.

(9) Backfill compaction shall be performed in 8-to12-inch lifts. The compaction tests shall be performed in maximum increments of 2 feet. The test results shall be given to the City Inspector for review and approval prior to paving. Material testing will be required for trench backfill (native or imported), asphalt, and concrete. Testing shall be performed by a certified independent testing laboratory. The cost of testing is the responsibility of the franchise utility or contractor. The number of tests required shall be the same as for asphalt density testing, or as directed by the inspector.

(10) Temporary restoration of trenches for overnight use shall be accomplished by using cold mix, asphalt-treated base (ATB), or steel plates. ATB used for temporary restoration

may be dumped directly into the trench, bladed out, and rolled. After rolling, the trench must be filled flush with asphalt to provide a smooth riding surface.

(11) ATB shall be placed to the compacted depth as shown on standard plans or as directed by the City Engineer. Asphalt cement shall be paving asphalt AR-4000W. Materials shall conform with Section 9-02.1(4) of the Standard Specifications.

(12) Tack shall be emulsified asphalt grade CSS-1 as specified in Section 9-02.1(6) of the Standard Specifications and shall be applied to the existing pavement and edges of sawcuts as specified in Section 5-04 of the Standard Specifications.

(13) 1/2" HMA shall be placed on the prepared surface by an approved paving machine and shall be in accordance with the requirements of Section 5-04 of the Standard Specifications, except that longitudinal joints between successive layers of asphalt concrete shall be displaced laterally a minimum of 12 inches, unless otherwise approved by the Inspector. Fine and coarse aggregate shall be in accordance with Section 9-03.8 of the Standard Specifications. Asphalt concrete over 2 inches thick shall be placed in equal lifts not to exceed 2 inches each.

(14) Cuts for trenches in all street surfaces, walks, and driveways shall be either ground or sawcut. Ground joints shall be feathered and shimmed to provide a smooth surface. Feathering and shimming shall be accomplished by raking out the oversized aggregates from the 1/2" HMA mix. Surface smoothness shall conform to Section 5-04.3(13) of the Standard Specifications. The paving shall be corrected by removal and repaving of the trench only.

(15) Compaction of all lifts of asphalt shall be at an average of 92% of maximum density as determined by WSDOT Test Method 705. The number of tests required per square foot of trenching shall be as follows:

- One test for less than 50 square feet of trenching area
- Two tests for 50 to 100 square feet of trenching area
- Three tests for 100-plus to 300 square feet of trenching area
- One test for every 200 square feet over 300 square feet of trenching area or every 100 lineal feet of trench, if applicable

Testing shall be performed by a certified independent testing laboratory. The cost of testing is the responsibility of the franchise utility or contractor.

The testing is not intended to relieve the contractor from any liability for the trench restoration. It is intended to show the Inspector and the city that the restoration meets these specifications.

(16) All joints shall be sealed using paving asphalt AR4000W.

B. Whenever a new street is completed or an overlay of an existing street has been completed within five (5) years of a newly proposed cut, additional roadway restoration shall be required as determined by the Public Works Director or designee.

C. Asphalt patch depths will vary based upon the classification of the streets being trenched. The asphalt depths shall be shown on the Right-of-Way Use Permit and the work shall be performed as required by the attached details. The minimum paving depths for all trenching are:

(1) 8 inches for arterial streets
(2) 6 inches for local streets
(3) 4 inches for driveway approaches and walkways

D. When trenching occurs within the street shoulder, the shoulder shall be restored to its original or better condition within 30 days of first opening the trench.

E. The final patch shall be completed within 30 days of the first opening the trench. This time frame may be adjusted if delays are due to inclement weather or other adverse conditions. Delay of final patch or overlay work must be approved by the Review Engineer.

F. Any patch or overlay Downtown shall be permanent and completed as soon as possible. Hours of work on all arterials shall be limited to 8:30 AM to 2:30 PM or as determined by the Public Works Director or designee.

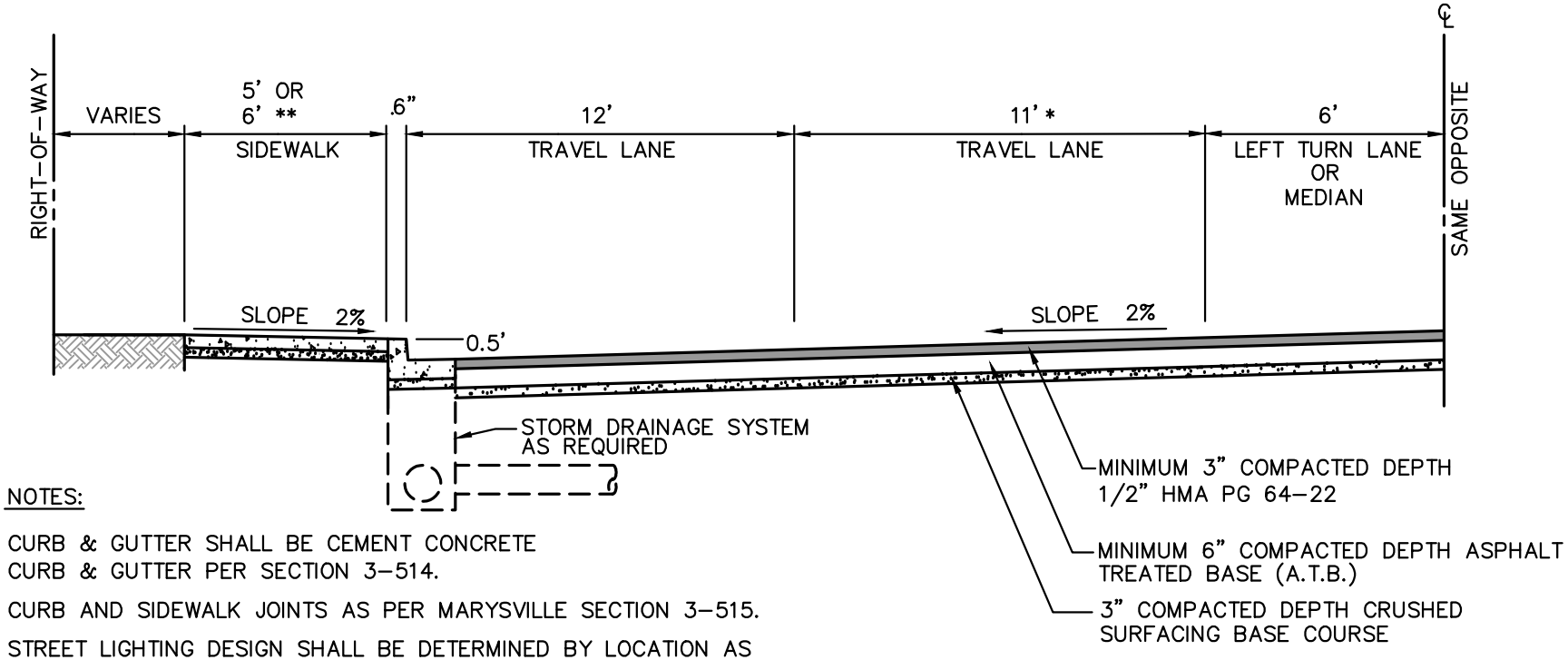


NOTES:

1. CURB & GUTTER SHALL BE CEMENT CONCRETE CURB & GUTTER PER SECTION 3-514.
2. CURB AND SIDEWALK JOINTS AS PER MARYSVILLE SECTION 3-515.
3. STREET LIGHTING DESIGN SHALL BE DETERMINED BY LOCATION AS PER MARYSVILLE SECTION 3-506.
4. THIS DRAWING ILLUSTRATES A MINIMUM ASPHALT CONCRETE ROAD SECTION. ACTUAL SURFACING DESIGN FOR ARTERIALS AND COMMERCIAL ACCESS STREETS SHALL BE BASED ON SOILS AND TRAFFIC ANALYSIS.
5. ARTERIAL STREETS DESIGNATED AS A STREETSCAPE ROUTE SHALL PROVIDE A 5'-12' PLANTER STRIP. SEE APPENDIX B.
6. A MINIMUM SEVEN FOOT SIDEWALK SHALL BE USED IN THE DOWNTOWN CENTRAL BUSINESS DISTRICT AND SPECIFIC NEIGHBOORHOOD PLANS.
7. THE RIGHT-OF-WAY WIDTH SHALL BE WIDENED AN ADDITIONAL 5 FT MIN FOR PLACEMENT OF FIRE HYDRANTS AND MAILBOX CLUSTERS.
8. DRAINAGE REQUIRED BEHIND WALK IN CUT AREAS.
9. REVERSE SLOPE SIDEWALKS ARE ALLOWED SUBJECT TO PLAN REVIEW.

* SEE APPENDIX B FOR NUMBER OF LANES AND RIGHT-OF-WAY WIDTHS

** 6' ADJACENT TO CURB, 5' ADJACENT TO PLANTER STRIP

APPROVED BY 12/28/16

MARYSVILLE CITY ENGINEER DATE

CITY OF Marysville WASHINGTON

# PRINCIPAL & MINOR ARTERIAL

COMBINED CURB, GUTTER & SIDEWALK

STANDARD PLAN 3-201-001

LAST REVISED 12/28/16

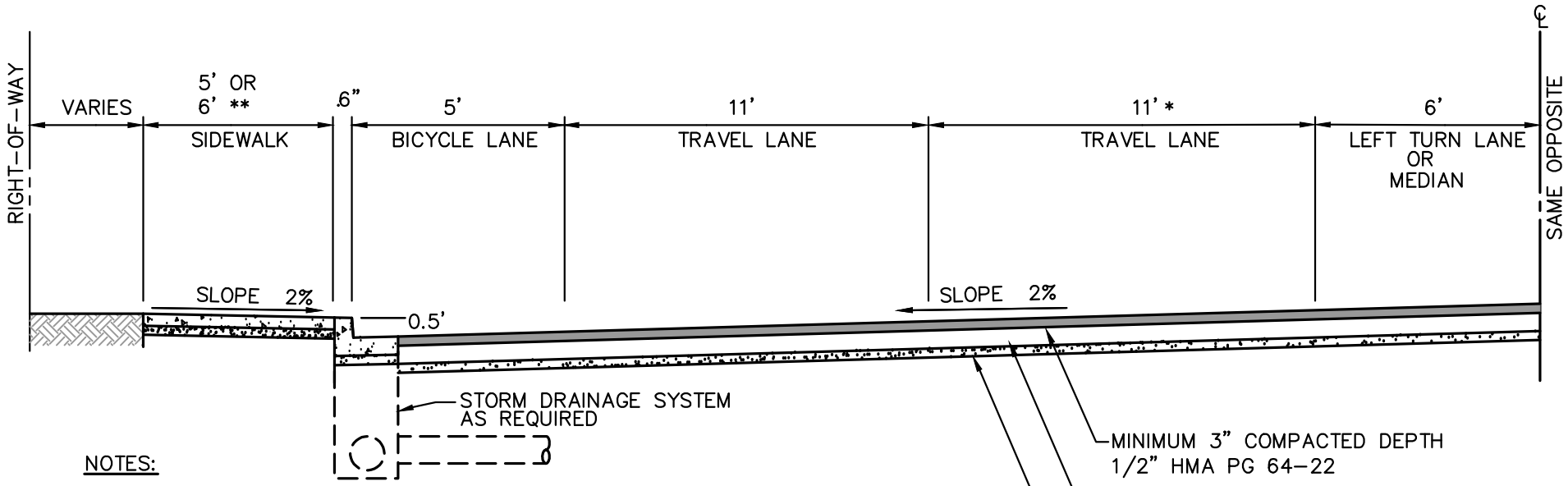


MINIMUM 3" COMPACTED DEPTH
1/2" HMA PG 64-22

MINIMUM 6" COMPACTED DEPTH ASPHALT
TREATED BASE (A.T.B.)

3" COMPACTED DEPTH CRUSHED
SURFACING BASE COURSE

NOTES:

1. CURB & GUTTER SHALL BE CEMENT CONCRETE BARRIER CURB & GUTTER PER SECTION 3-514.
2. CURB AND SIDEWALK JOINTS AS PER MARYSVILLE SECTION 3-515.
3. STREET LIGHTING SHALL BE DETERMINED BY LOCATION AS PER MARYSVILLE SECTION 3-506.
4. THIS DRAWING ILLUSTRATES A MINIMUM ASPHALT CONCRETE ROAD SECTION. ACTUAL SURFACING DESIGN FOR ARTERIALS AND COMMERCIAL ACCESS STREETS SHALL BE BASED ON SOILS AND TRAFFIC ANALYSIS.
5. ARTERIAL STREETS DESIGNATED AS A STREETSCAPE ROUTE SHALL PROVIDE A 5'-12' PLANTER STRIP. SEE APPENDIX B.
6. A MINIMUM SEVEN FOOT SIDEWALK SHALL BE USED IN THE DOWNTOWN CENTRAL BUSINESS DISTRICT.
7. THE RIGHT-OF-WAY WIDTH SHALL BE WIDENED AN ADDITIONAL 5 FT MIN FOR PLACEMENT OF FIRE HYDRANTS AND MAILBOX CLUSTERS.
8. DRAINAGE REQUIRED BEHIND WALK IN CUT AREAS.
9. REVERSE SLOPE SIDEWALKS ARE ALLOWED SUBJECT TO PLAN REVIEW.

* SEE APPENDIX B FOR NUMBER OF LANES AND RIGHT-OF-WAY WIDTHS

** 6' ADJACENT TO CURB, 5' ADJACENT TO PLANTER STRIP

APPROVED BY

12/28/16

MARYSVILLE CITY ENGINEER — DATE

CITY OF Marysville WASHINGTON

# PRINCIPAL & MINOR ARTERIAL

BICYCLE CONFIGURATION

STANDARD PLAN 3-201-002

LAST REVISED 12/28/16

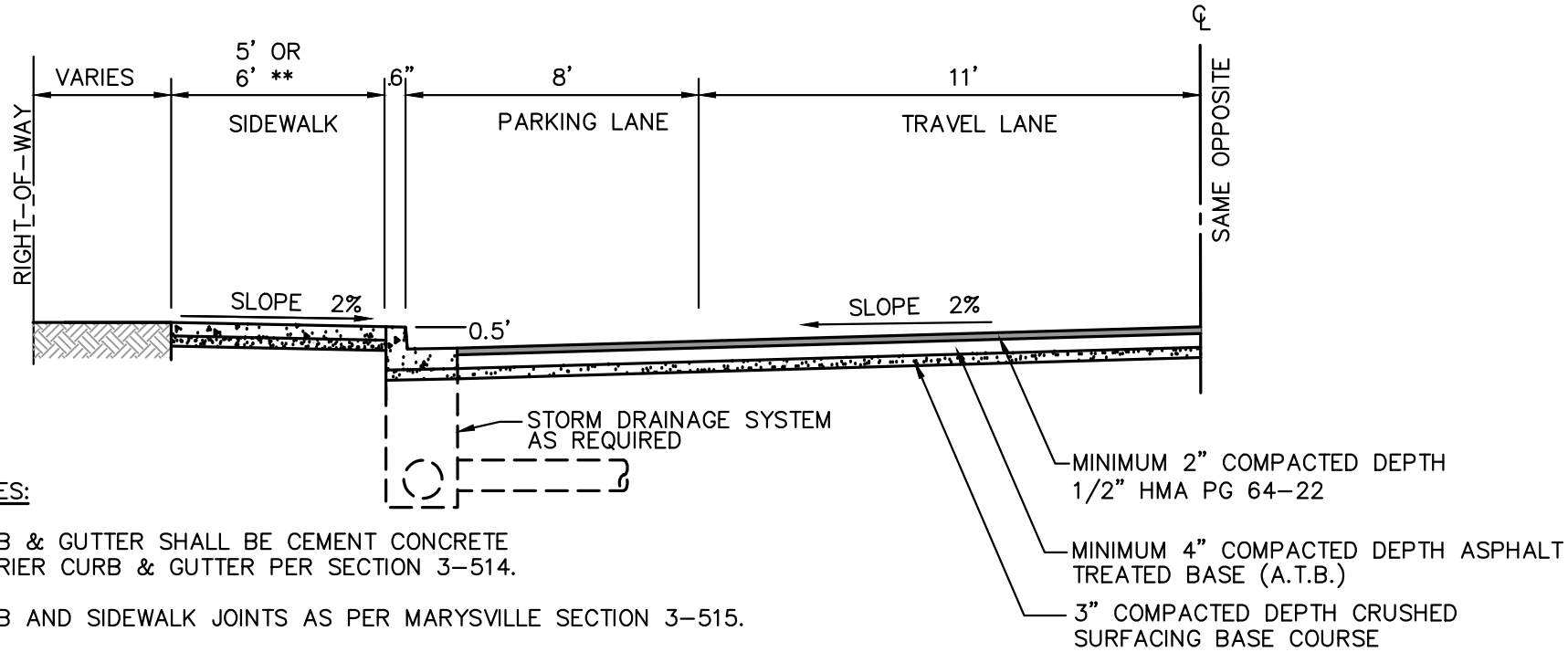


NOTES:

1. CURB & GUTTER SHALL BE CEMENT CONCRETE BARRIER CURB & GUTTER PER SECTION 3-514.
2. CURB AND SIDEWALK JOINTS AS PER MARYSVILLE SECTION 3-515.
3. STREET LIGHTING SHALL BE DETERMINED BY LOCATION AS PER MARYSVILLE SECTION 3-506.
4. THIS DRAWING ILLUSTRATES A MINIMUM ASPHALT CONCRETE ROAD SECTION. ACTUAL SURFACING DESIGN FOR ARTERIALS AND COMMERCIAL ACCESS STREETS SHALL BE BASED ON SOILS AND TRAFFIC ANALYSIS.
5. A 12' TRAVEL LANE AND ADDITIONAL RIGHT OF WAY MAY BE REQUIRED AS DETERMINED BY THE CITY ENGINEER
6. A COMMERCIAL AND INDUSTRIAL ACCESS APPLICATION MAY REQUIRE A SEVEN FOOT SIDEWALK SECTION.
7. THE RIGHT-OF-WAY WIDTH SHALL BE WIDENED AN ADDITIONAL 5 FT MIN FOR PLACEMENT OF FIRE HYDRANTS AND MAILBOX CLUSTERS.
8. DRAINAGE REQUIRED BEHIND WALK IN CUT AREAS.
9. ARTERIAL STREETS DESIGNATED AS A STREETSCAPE ROUTE SHALL PROVIDE A 5' PLANTER STRIP. SEE APPENDIX B.
10. REVERSE SLOPE SIDEWALKS ARE ALLOWED SUBJECT TO PLAN REVIEW.

* 6' ADJACENT CURB, 5' ADJACENT TO PLANTER STRIP

APPROVED BY 12/28/16

MARYSVILLE CITY ENGINEER DATE

CITY OF Marysville WASHINGTON

**COLLECTOR ARTERIAL/ COMMERCIAL ACCESS STREET**

COMBINED CURB, GUTTER & SIDEWALK

STANDARD PLAN 3-201-003

12/28/2016

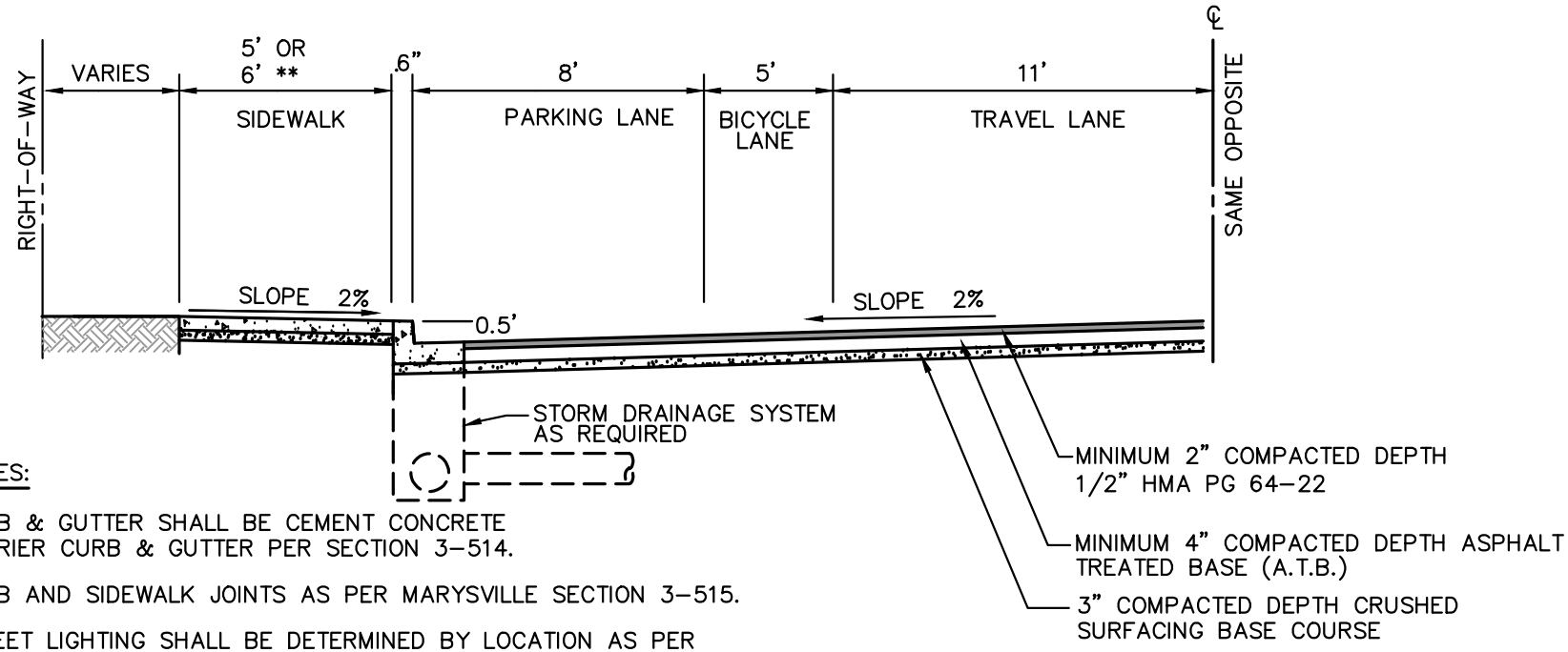


NOTES:

1. CURB & GUTTER SHALL BE CEMENT CONCRETE BARRIER CURB & GUTTER PER SECTION 3-514.
2. CURB AND SIDEWALK JOINTS AS PER MARYSVILLE SECTION 3-515.
3. STREET LIGHTING SHALL BE DETERMINED BY LOCATION AS PER MARYSVILLE SECTION 3-506.
4. THIS DRAWING ILLUSTRATES A MINIMUM ASPHALT CONCRETE ROAD SECTION. ACTUAL SURFACING DESIGN FOR ARTERIALS AND COMMERCIAL ACCESS STREETS SHALL BE BASED ON SOILS AND TRAFFIC ANALYSIS.
5. A 12' TRAVEL LANE AND ADDITIONAL RIGHT OF WAY MAY BE REQUIRED AS DETERMINED BY THE CITY ENGINEER
6. A COMMERCIAL AND INDUSTRIAL ACCESS APPLICATION MAY REQUIRE A SEVEN FOOT SIDEWALK SECTION.
7. THE RIGHT-OF-WAY WIDTH SHALL BE WIDENED AN ADDITIONAL 5 FT MIN FOR PLACEMENT OF FIRE HYDRANTS AND MAILBOX CLUSTERS.
8. DRAINAGE REQUIRED BEHIND WALK IN CUT AREAS.
9. ARTERIAL STREETS DESIGNATED AS A STREETSCAPE ROUTE SHALL PROVIDE A 5' PLANTER STRIP. SEE APPENDIX B.
10. REVERSE SLOPE SIDEWALKS ARE ALLOWED SUBJECT TO PLAN REVIEW.

LAST REVISED 12/28/16

APPROVED BY 12/28/16

MARYSVILLE CITY ENGINEER DATE

CITY OF Marysville WASHINGTON

**COLLECTOR ARTERIAL/ COMMERCIAL ACCESS STREET**

BICYCLE CONFIGURATION

STANDARD PLAN 3-201-004

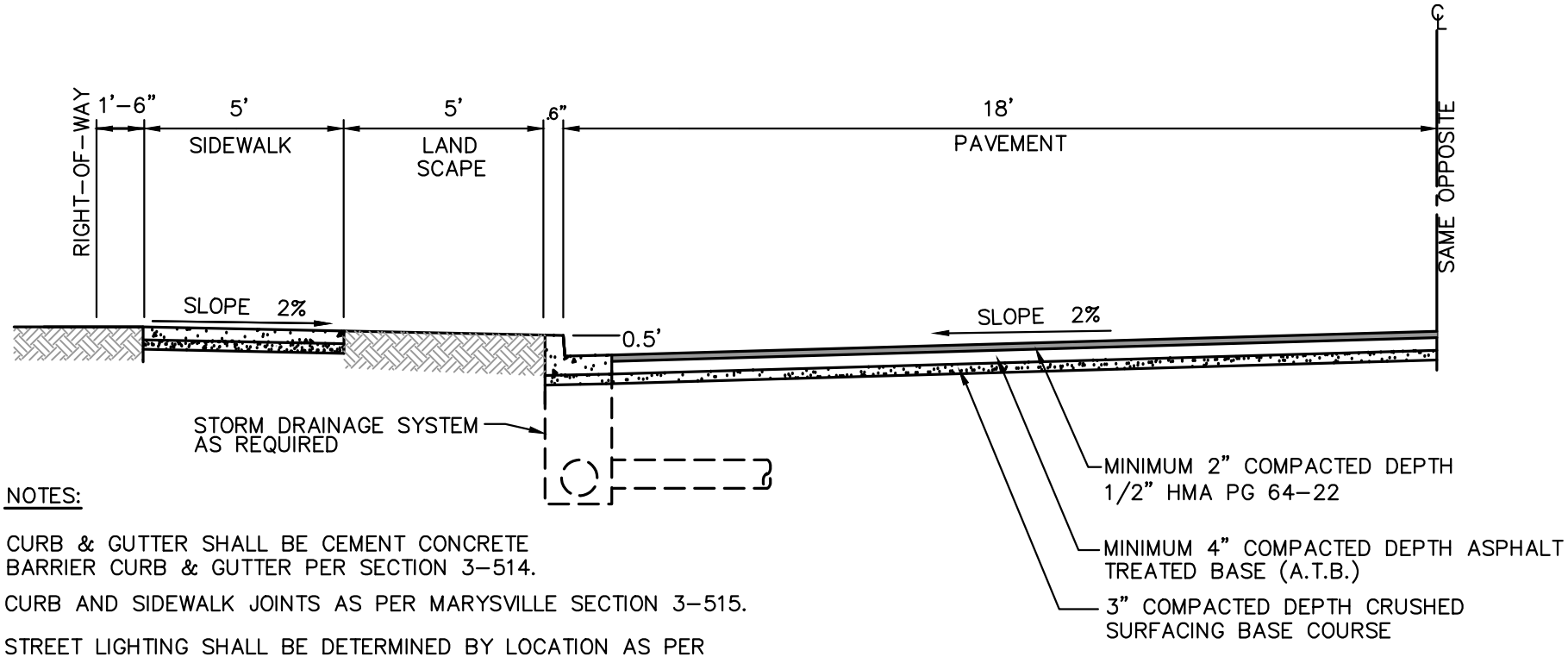


NOTES:

1. CURB & GUTTER SHALL BE CEMENT CONCRETE BARRIER CURB & GUTTER PER SECTION 3-514.
2. CURB AND SIDEWALK JOINTS AS PER MARYSVILLE SECTION 3-515.
3. STREET LIGHTING SHALL BE DETERMINED BY LOCATION AS PER MARYSVILLE SECTION 3-506.
4. THIS DRAWING ILLUSTRATES A MINIMUM ASPHALT CONCRETE ROAD SECTION. ACTUAL SURFACING DESIGN FOR ARTERIALS AND COMMERCIAL ACCESS STREETS SHALL BE BASED ON SOILS AND TRAFFIC ANALYSIS.
5. THIS DRAWING ILLUSTRATES A MINIMUM ASPHALT CONCRETE ROAD SECTION. DESIGN FOR RESIDENTIAL ACCESS STREETS SHALL BE IN ACCORDANCE WITH SECS. 3-401 AND 3-402. ADDITIONAL SUBGRADE TREATMENT MAY BE REQUIRED DEPENDING ON SOIL CONDITIONS.
6. THE RIGHT-OF-WAY WIDTH SHALL BE WIDENED AN ADDITIONAL 5 FT MIN FOR PLACEMENT OF FIRE HYDRANT AND MAILBOX CLUSTER INSTALLATION.
7. DRAINAGE REQUIRED BEHIND WALK IN CUT AREAS.
8. REVERSE SLOPE SIDEWALKS ARE ALLOWED SUBJECT TO PLAN REVIEW.

APPROVED BY

MARYSVILLE CITY ENGINEER — DATE 12/28/16

CITY OF Marysville WASHINGTON

**NEIGHBORHOOD COLLECTOR**
**60' RIGHT-OF-WAY**

COMBINED CURB, GUTTER & SIDEWALK

STANDARD PLAN 3-202-001

LAST REVISED 12/28/16

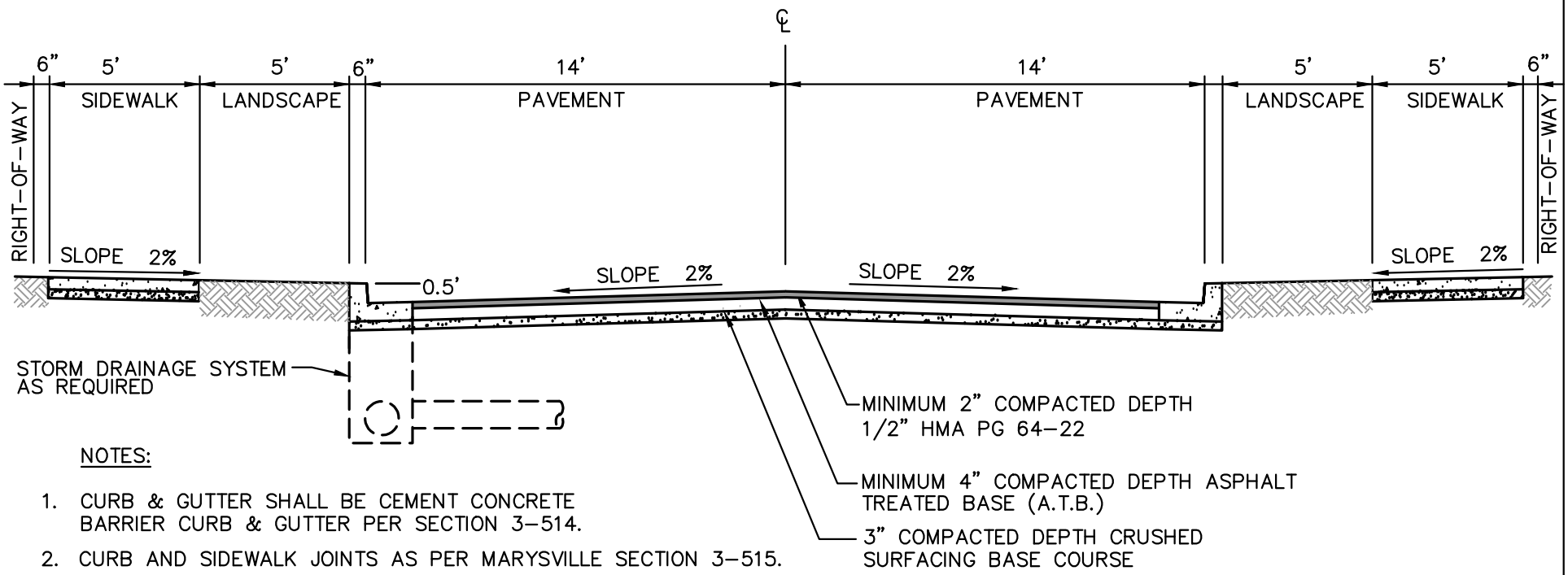


NOTES:

1. CURB & GUTTER SHALL BE CEMENT CONCRETE BARRIER CURB & GUTTER PER SECTION 3-514.
2. CURB AND SIDEWALK JOINTS AS PER MARYSVILLE SECTION 3-515.
3. STREET LIGHTING SHALL BE DETERMINED BY LOCATION AS PER MARYSVILLE SECTION 3-506.
4. THIS DRAWING ILLUSTRATES A MINIMUM ASPHALT CONCRETE ROAD SECTION. ACTUAL SURFACING DESIGN FOR ARTERIALS AND COMMERCIAL ACCESS STREETS SHALL BE BASED ON SOILS AND TRAFFIC ANALYSIS.
5. THIS DRAWING ILLUSTRATES A MINIMUM ASPHALT CONCRETE ROAD SECTION. DESIGN FOR RESIDENTIAL ACCESS STREETS SHALL BE IN ACCORDANCE WITH SECS. 3-401 AND 3-402. ADDITIONAL SUBGRADE TREATMENT MAY BE REQUIRED DEPENDING ON SOIL CONDITIONS.
6. THE RIGHT-OF-WAY WIDTH SHALL BE WIDENED AN ADDITIONAL 5 FT MIN FOR PLACEMENT OF FIRE HYDRANT AND MAILBOX CLUSTER INSTALLATION.
7. DRAINAGE REQUIRED BEHIND WALK IN CUT AREAS.
8. REVERSE SLOPE SIDEWALKS ARE ALLOWED SUBJECT TO PLAN REVIEW.

APPROVED BY

12/28/16

MARYSVILLE CITY ENGINEER — DATE

CITY OF Marysville WASHINGTON

**LOCAL ACCESS STREET**
**50' RIGHT-OF-WAY**
COMBINED CURB, GUTTER & SIDEWALK

STANDARD PLAN 3-202-002

LAST REVISED 12/28/16

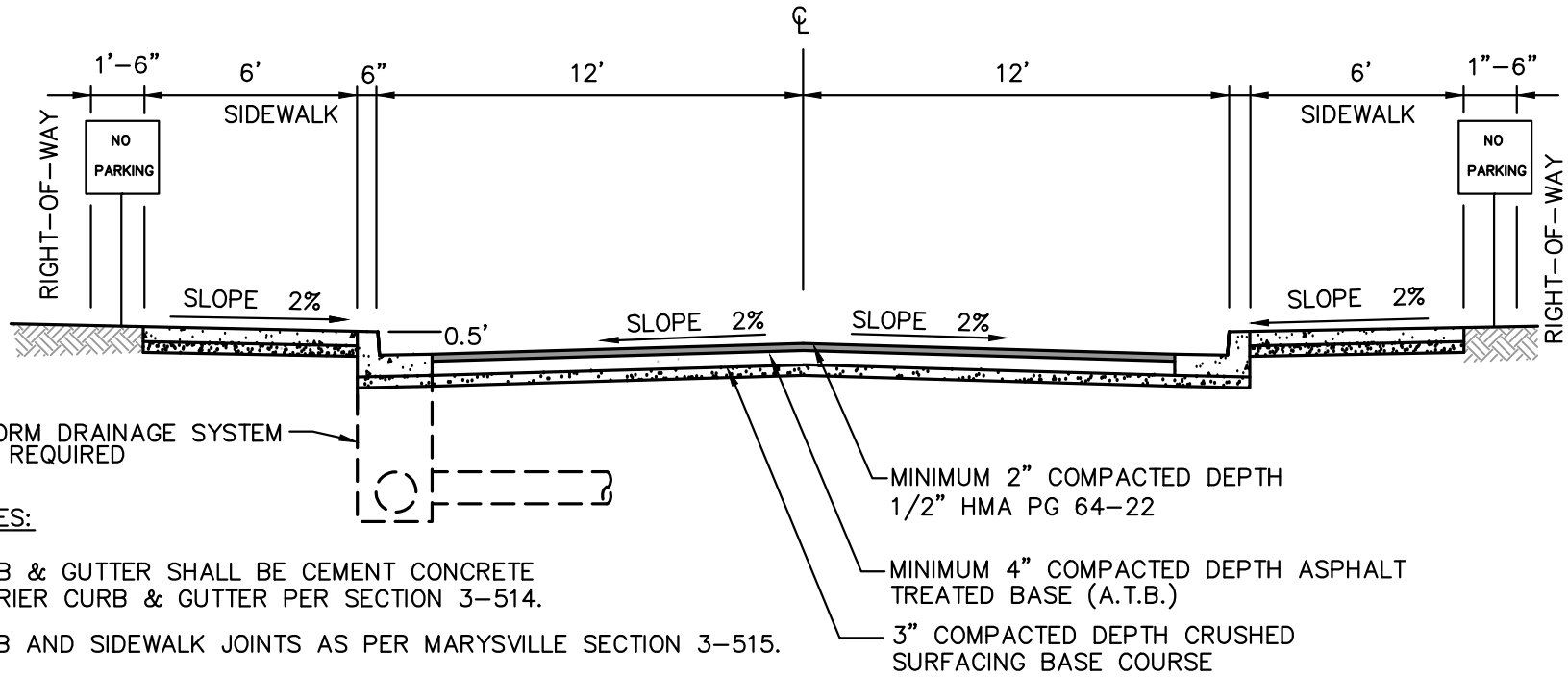


NOTES:

1. CURB & GUTTER SHALL BE CEMENT CONCRETE BARRIER CURB & GUTTER PER SECTION 3–514.
2. CURB AND SIDEWALK JOINTS AS PER MARYSVILLE SECTION 3–515.
3. STREET LIGHTING SHALL BE DETERMINED BY LOCATION AS PER MARYSVILLE SECTION 3–506.
4. THIS DRAWING ILLUSTRATES A MINIMUM ASPHALT CONCRETE ROAD SECTION. ACTUAL SURFACING DESIGN FOR ARTERIALS AND COMMERCIAL ACCESS STREETS SHALL BE BASED ON SOILS AND TRAFFIC ANALYSIS.
5. THIS DRAWING ILLUSTRATES A MINIMUM ASPHALT CONCRETE ROAD SECTION. DESIGN FOR RESIDENTIAL ACCESS STREETS SHALL BE IN ACCORDANCE WITH SECS. 3–401 AND 3–402. ADDITIONAL SUBGRADE TREATMENT MAY BE REQUIRED DEPENDING ON SOIL CONDITIONS.
6. THE RIGHT–OF–WAY WIDTH SHALL BE WIDENED AN ADDITIONAL 5 FT MIN FOR PLACEMENT OF FIRE HYDRANT AND MAILBOX CLUSTER INSTALLATION.
7. DRAINAGE REQUIRED BEHIND WALK IN CUT AREAS.
8. REVERSE SLOPE SIDEWALKS ARE ALLOWED SUBJECT TO PLAN REVIEW.

APPROVED BY 12/28/16

MARYSVILLE CITY ENGINEER DATE

CITY OF Marysville WASHINGTON

# LOCAL ACCESS STREET
## 40' RIGHT–OF–WAY
COMBINED CURB, GUTTER & SIDEWALK

LAST REVISED 12/28/16

STANDARD PLAN 3–202–003

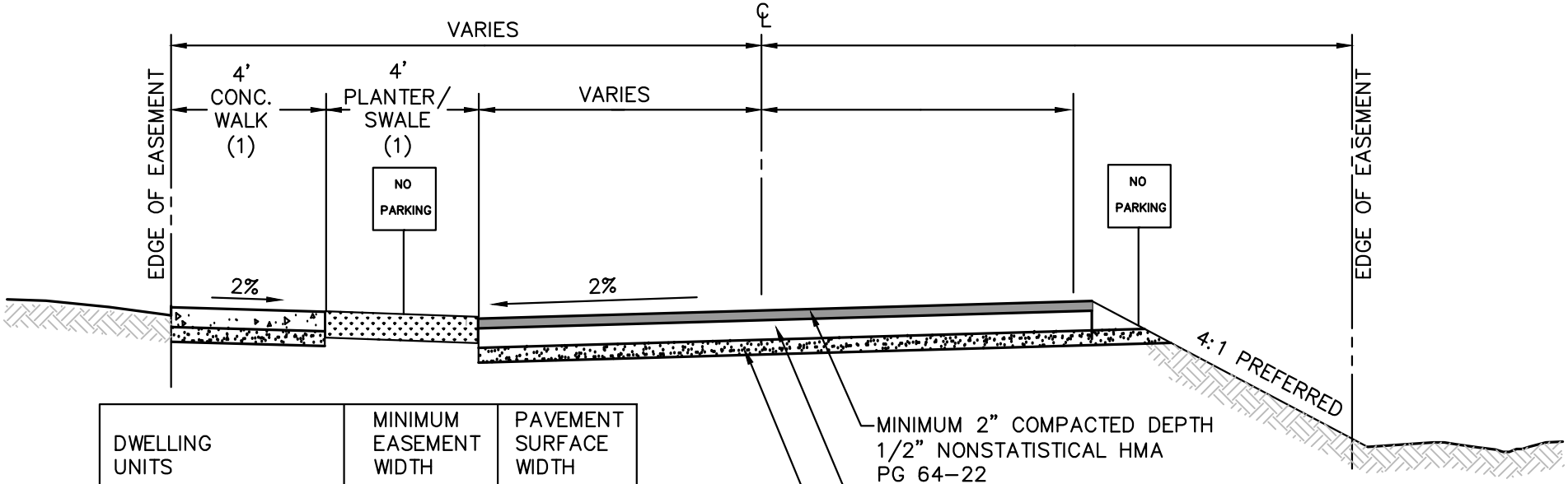


| DWELLING UNITS | MINIMUM EASEMENT WIDTH | PAVEMENT SURFACE WIDTH |
|---|---|---|
| 1 LOT OR DUPLEX | 20' | 12' |
| 2 TO 4 LOTS | 30' | 20' |
| 4 TO 8 UNITS | 30' | 20' |

NOTES:

1. 2 OR MORE LOTS OR 4 OR MORE UNITS REQUIRE A DETACHED 4' CONCRETE OR PERMEABLE PAVEMENT WALK SEPARATED BY A 4' PLANTER STRIP.
2. NO ON STREET PARKING SHALL BE PERMITTED WHICH SHALL BE INDICATED BY NO PARKING SIGNS POSTED ON BOTH SIDES OF THE PRIVATE ROAD.
3. ALL PRIVATE ROADS SHALL BE SIGNED "PRIVATE ROAD."
4. FOR PERMEABLE PAVEMENT, BASE COURSE REQUIREMENTS SHALL BE IN COMPLIANCE WITH SECTION 3-400 SURFACING.

APPROVED BY 12/28/16

MARYSVILLE CITY ENGINEER DATE

CITY OF Marysville WASHINGTON

# TYPICAL SECTION
## PRIVATE ROAD/ ACCESS EASEMENT

STANDARD PLAN 3-202-004

LAST REVISED 12/28/16

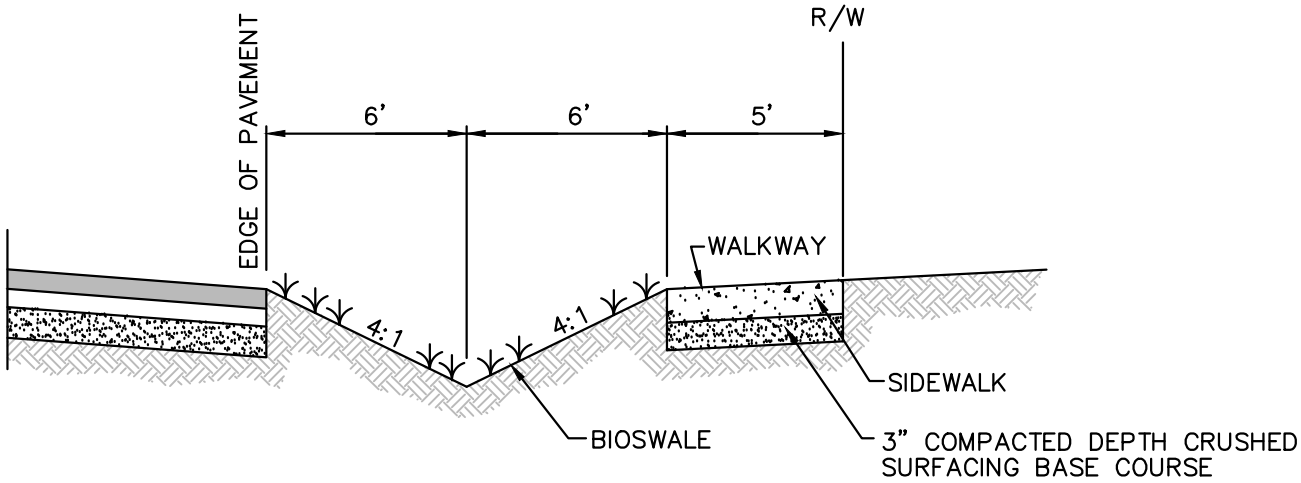


NOTES:

1. BIOSWALE SHALL BE DESIGNED PER THE WASHINGTON STATE DEPARTMENT OF ECOLOGY REQUIREMENTS AND THE CITY OF MARYSVILLE DRAINAGE STANDARDS.

2. SEE APPLICABLE ROADWAY SECTION FOR PAVEMENT THICKNESSES. DESIGN OF THE ROADWAY SHALL BE IN ACCORDANCE WITH SECTIONS 3-401 AND 3-402. ADDITIONAL SUBGRADE TREATMENT MAY BE REQUIRED TREATMENT MAY BE REQUIRED DEPENDING ON SOIL CONDITIONS.

3. SEE SECTION 3-519 FOR SEPARATED WALKWAY

* USE OF THIS SECTION SHALL BE APPROVED BY THE PUBLIC WORKS DIRECTOR OR DESIGNEE

APPROVED BY 12/28/16

MARYSVILLE CITY ENGINEER DATE

**ALTERNATE SHOULDER SECTION**

CITY OF Marysville WASHINGTON

STANDARD PLAN 3-202-005

LAST REVISED 12/28/16

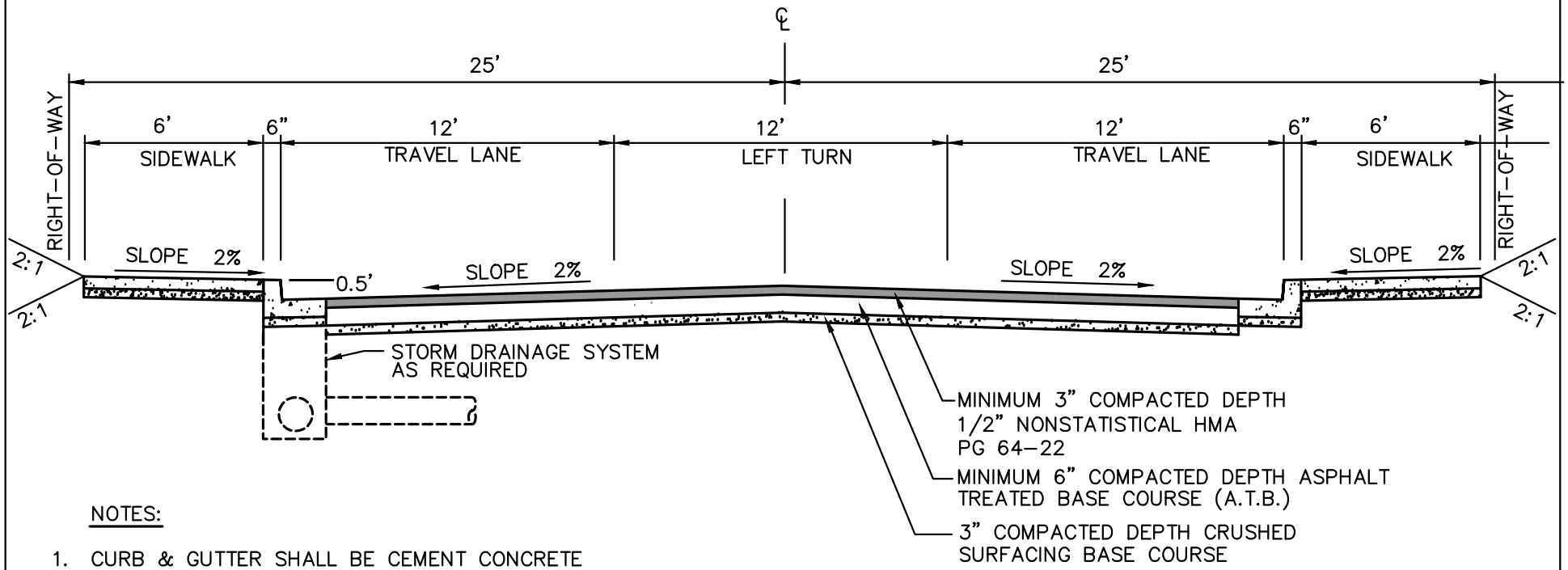


NOTES:

1. CURB & GUTTER SHALL BE CEMENT CONCRETE BARRIER CURB & GUTTER PER SECTION 3-514.
2. CURB AND SIDEWALK JOINTS AS PER SECTION 3-515.
3. STREET LIGHTING SHALL BE DETERMINED BY LOCATION.
4. INDUSTRIAL ACCESS PAVEMENT THICKNESS SHALL BE DESIGNED TO ACCOMMODATE TRUCK LOADING. THE CITY ENGINEER SHALL APPROVE DESIGN CALCULATIONS.
5. THIS DRAWING ILLUSTRATES A MINIMUM ASPHALT CONCRETE ROAD SECTION. DESIGN FOR RESIDENTIAL ACCESS STREETS SHALL BE IN ACCORDANCE WITH SECS. 3-401 AND 3-402. ADDITIONAL SUBGRADE TREATMENT MAY BE REQUIRED DEPENDING ON SOIL CONDITIONS.
6. THE RIGHT-OF-WAY WIDTH SHALL BE WIDENED AN ADDITIONAL 5 FT MIN FOR PLACEMENT OF FIRE HYDRANT AND MAILBOX CLUSTER INSTALLATION.
7. REVERSE SLOPE SIDEWALKS ARE ALLOWED SUBJECT TO PLAN REVIEW.

APPROVED BY

12/28/16

MARYSVILLE CITY ENGINEER DATE

# INDUSTRIAL ACCESS STREET

## 50' RIGHT-OF-WAY

CITY OF Marysville WASHINGTON

STANDARD PLAN 3-203-001

LAST REVISED 12/28/16

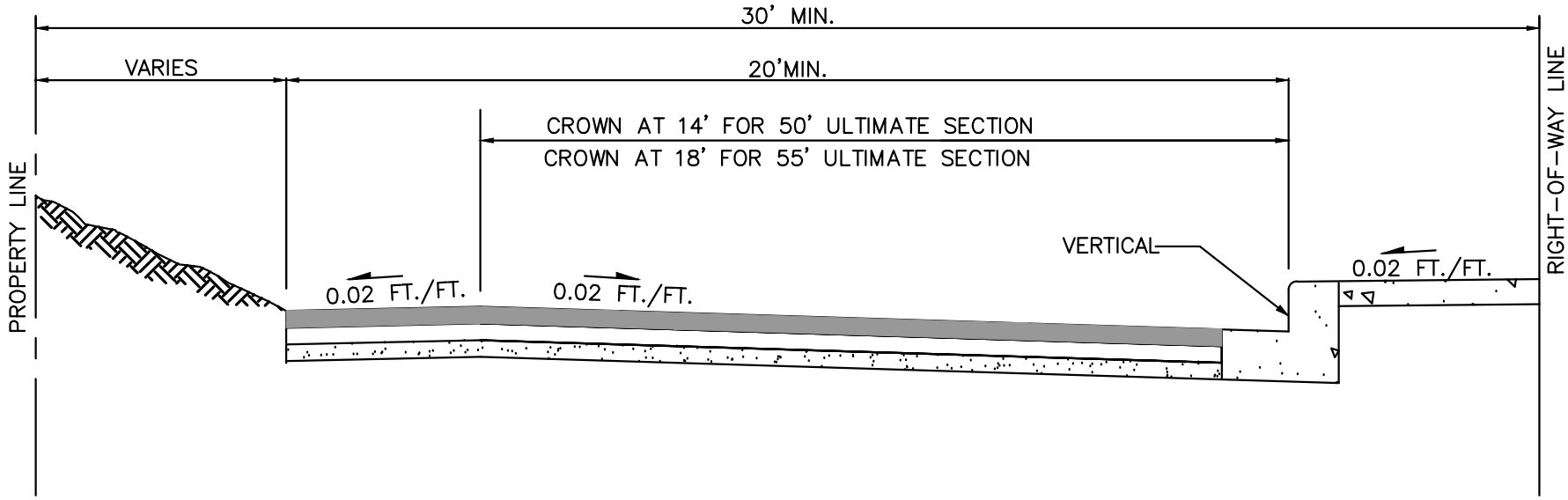


NOTES:

1. FOR ACTUAL ROADWAY SECTION SEE APPLICABLE STANDARD PLAN.
2. WHEN PLANTER STRIPS ARE REQUIRED MINIMUM RIGHT-OF-WAY WILL BE GREATER.

APPROVED BY

12/28/16

MARYSVILLE CITY ENGINEER DATE

# HALF – STREET

CITY OF Marysville WASHINGTON

STANDARD PLAN 3-206-001

LAST REVISED 12/28/16

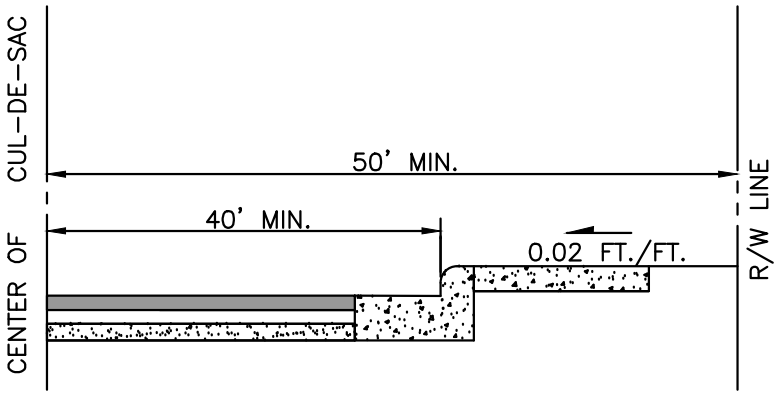


VERTICAL CURB & GUTTER

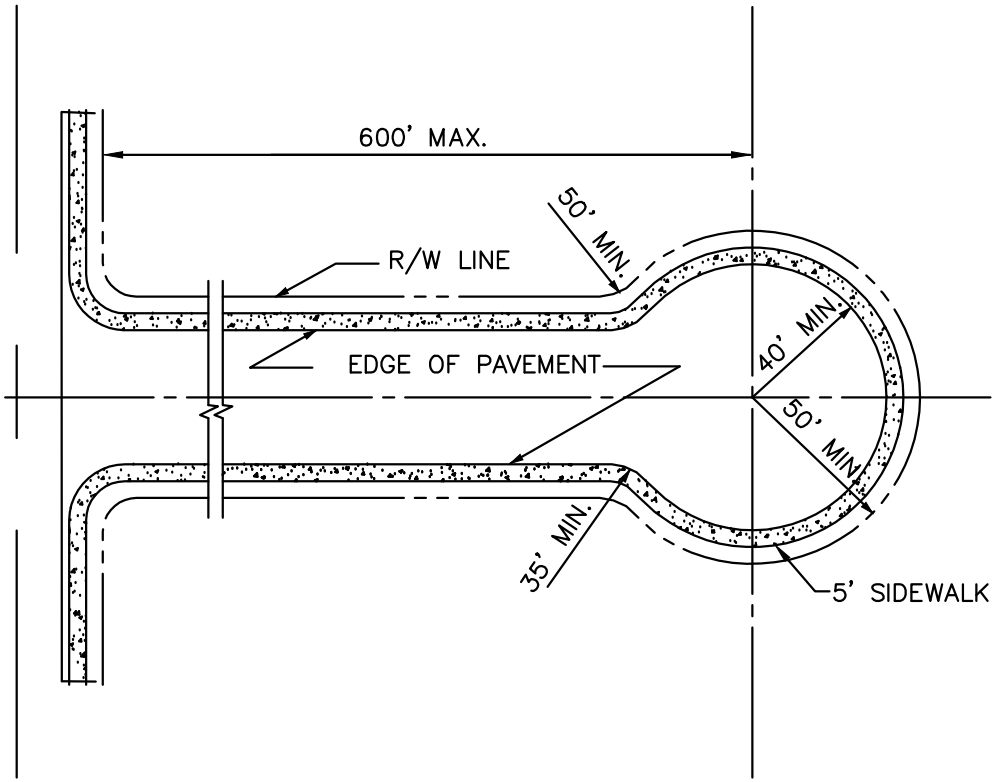


NOTES:

1. ALL PERMANENT CUL-DE-SACS SHALL BE CONSTRUCTED WITH A VERTICAL CURB AND GUTTER SECTION.
2. SEE SECTION 3-207 FOR CUL-DE-SAC LENGTH EXCEPTION.

APPROVED BY 12/28/16

MARYSVILLE CITY ENGINEER DATE

# CUL-DE-SAC DETAIL

CITY OF Marysville WASHINGTON

STANDARD PLAN 3-207-001

LAST REVISED 12/28/16

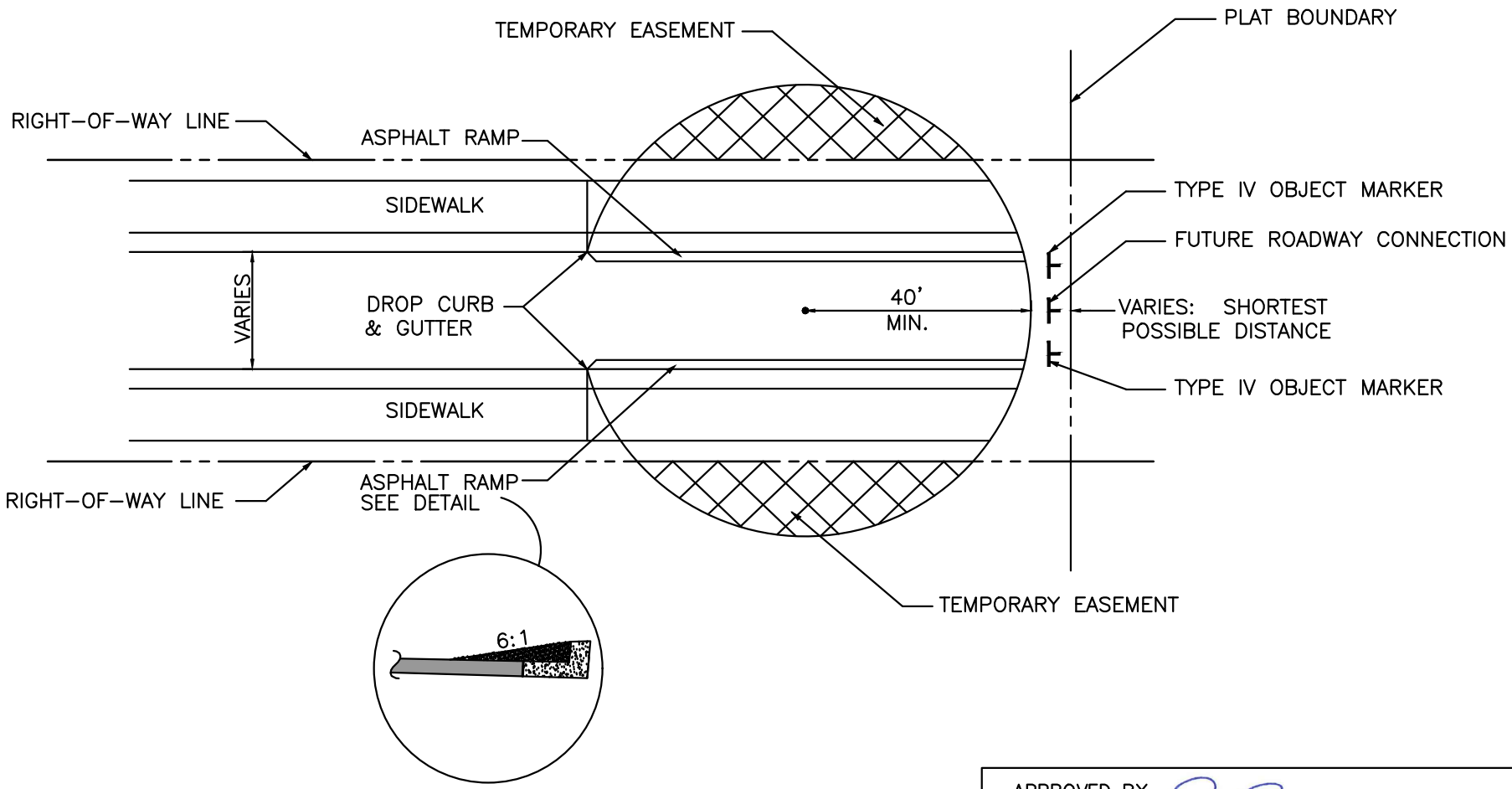


NOTES:

1. 2 TYPE IV OBJECT MARKERS REQUIRED AT END OF BULB. SEE 3-508. BARRICADE SHALL HAVE 30"x36" SIGN STATING "FUTURE ROAD EXTENSION", REQUIRED.

APPROVED BY

12/28/16

MARYSVILLE CITY ENGINEER DATE

CITY OF Marysville WASHINGTON

**TEMPORARY CUL-DE-SAC**

STANDARD PLAN 3-207-002

LAST REVISED 12/28/16

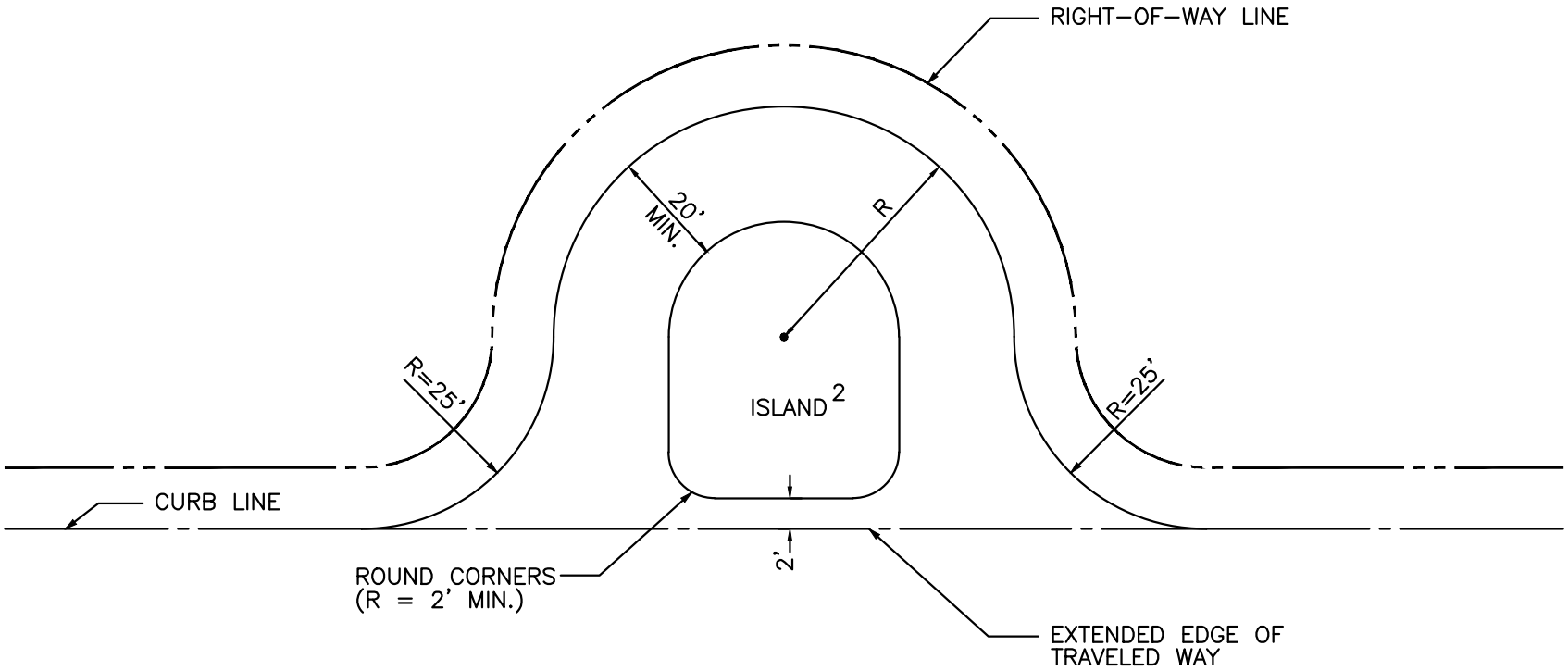


NOTES:

1. ISLAND REQUIRED ON EYEBROWS WITH R GREATER THAN 25 FEET.
2. MIN. ISLAND DIAM. SHALL BE 10 FEET.
3. LARGER RADII THAN SHOWN MAY BE REQUIRED FOR TURNING MOVEMENTS

APPROVED BY 12/28/16

MARYSVILLE CITY ENGINEER DATE

CITY OF Marysville WASHINGTON

# TYPICAL ISLAND SECTION

STANDARD PLAN 3–207–003

LAST REVISED 12/28/16

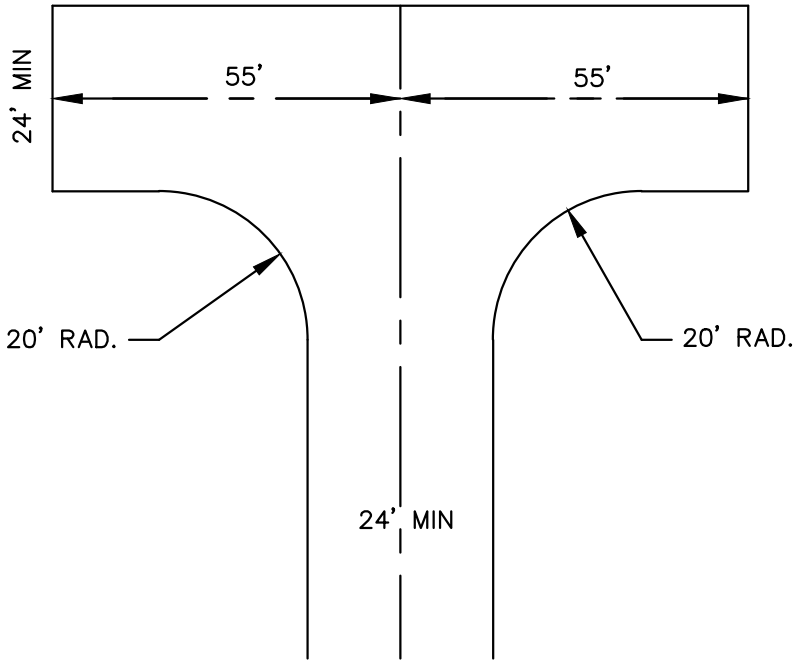


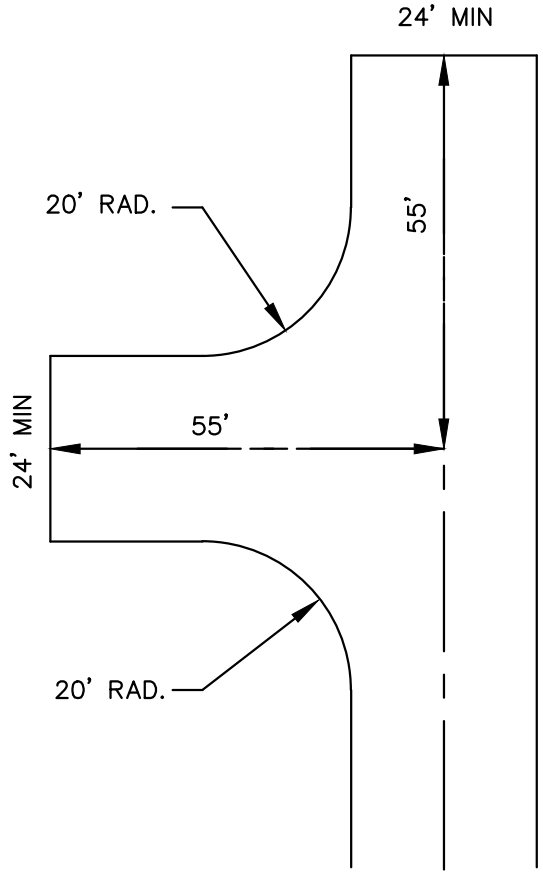


NOTES:

1. THIS STANDARD SHALL BE USED FOR 30' PRIVATE ROADS WHEN THEY EXCEED 150' IN LENGTH. (NOTE: THE LENGTH OF A PRIVATE ROAD SHALL BE MEASURED FROM THE EDGE OF THE INTERSECTING ROW TO THE END OF THE PRIVATE ROAD TRACT OR EASEMENT.)
2. ALL DIMENSIONS ARE MINIMUM PAVEMENT REQUIREMENTS.
3. THE TURNAROUND SHALL BE MARKED AS A FIRE LANE AND POSTED WITH NO PARKING SIGNS.
4. ALTERNATIVE TURNAROUNDS ARE NOT PERMITTED FOR PUBLIC ROADS.

APPROVED BY 12/28/16

MARYSVILLE CITY ENGINEER DATE

# PRIVATE ROAD
## ALTERNATIVE TURNAROUNDS

CITY OF Marysville WASHINGTON

STANDARD PLAN 3-207-004

LAST REVISED 12/28/16

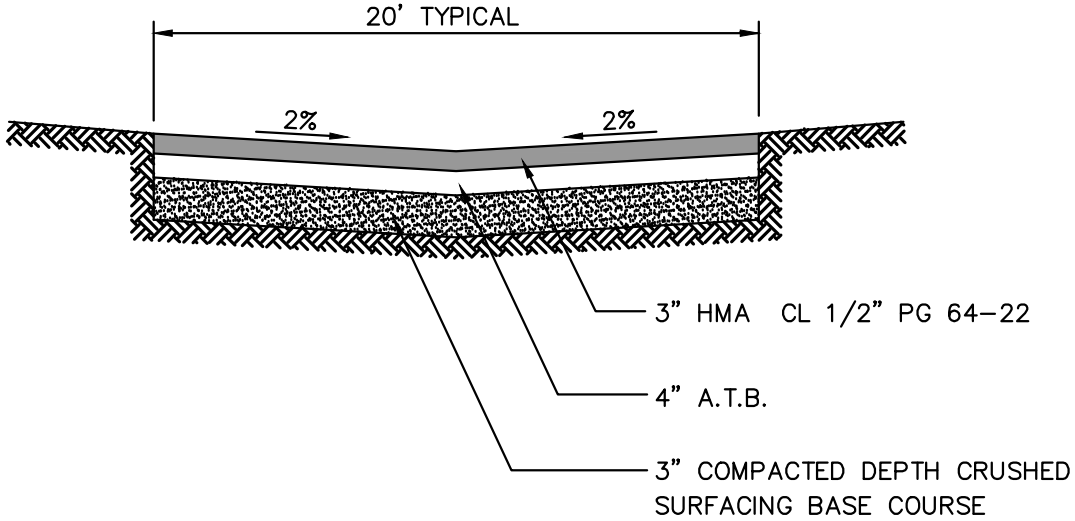


APPROVED BY

12/28/16

MARYSVILLE CITY ENGINEER DATE

# ALLEY SECTION

CITY OF Marysville WASHINGTON

STANDARD PLAN 3-208-001

LAST REVISED 12/28/16

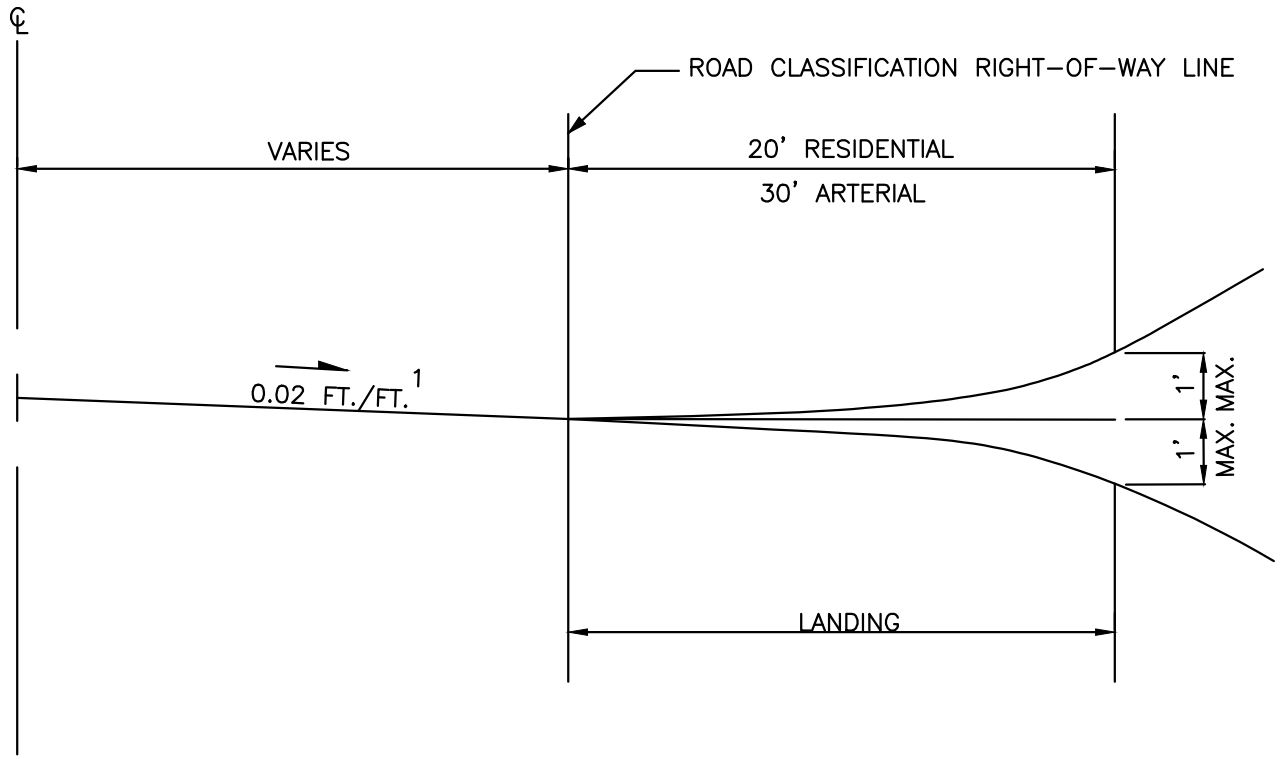


APPROVED BY

12/28/16

MARYSVILLE CITY ENGINEER DATE

CITY OF Marysville WASHINGTON

# INTERSECTION LANDING

STANDARD PLAN 3–209–001

LAST REVISED 12/28/16

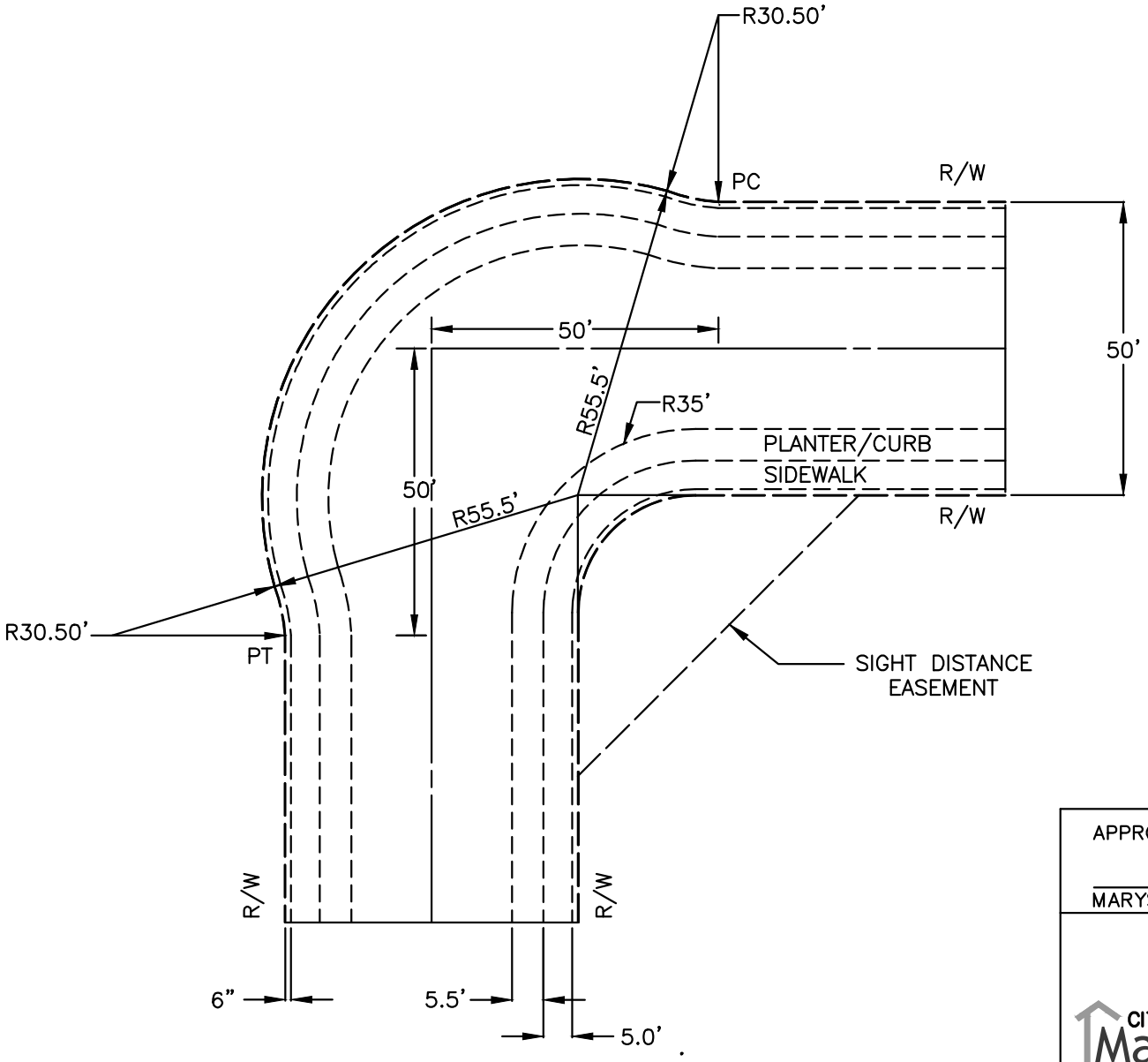


NOTES:

1. INTERSECTION ELBOWS MAY BE USED IN LIEU OF HORIZONTAL CURVES FOR CERTAIN LOW–SPEED DESIGNS IN SPECIAL CIRCUMSTANCES ONLY, REQUIRING CITY ENGINEER APPROVAL.
2. A MINIMUM 50' TANGENT IS REQUIRED FROM THE POINT OF INTERSECTION OF THE CENTERLINES.
3. INTERSECTION ANGLE SHALL BE 90 DEGREES +\– 10 DEGREES.
4. RADII SHOWN APPLY FOR A 50–FOOT LOCAL ACCESS STREET.
5. A SIGHT DISTANCE EASEMENT SHALL BE GRANTED ACROSS THE CORNER PROPERTY.

APPROVED BY 12/28/16

MARYSVILLE CITY ENGINEER DATE

CITY OF Marysville WASHINGTON

**90 DEGREE INTERSECTION ELBOW**

STANDARD PLAN 3–209–002

LAST REVISED 12/28/16

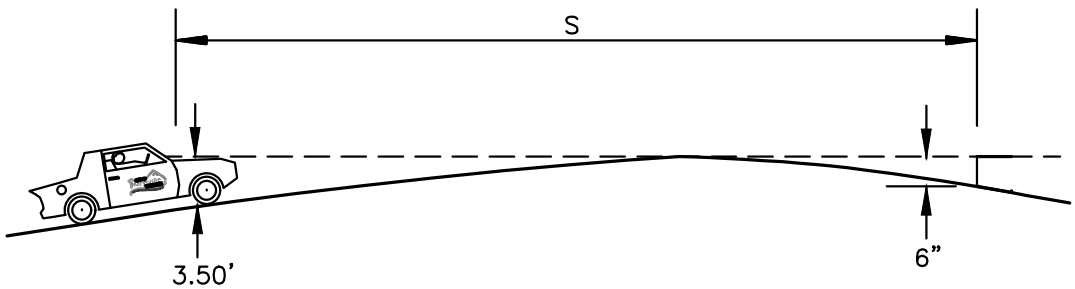


| WHEN S > L | WHEN S < L |
|---|---|
| $L = 2S - \frac{1917}{A}$ | $L = \frac{AS^2}{1917}$ |

L = CURVE LENGTH (FEET)
A = ALGEBRAIC GRADE DIFFERENCE (PERCENT)
S = SIGHT DISTANCE (FEET)

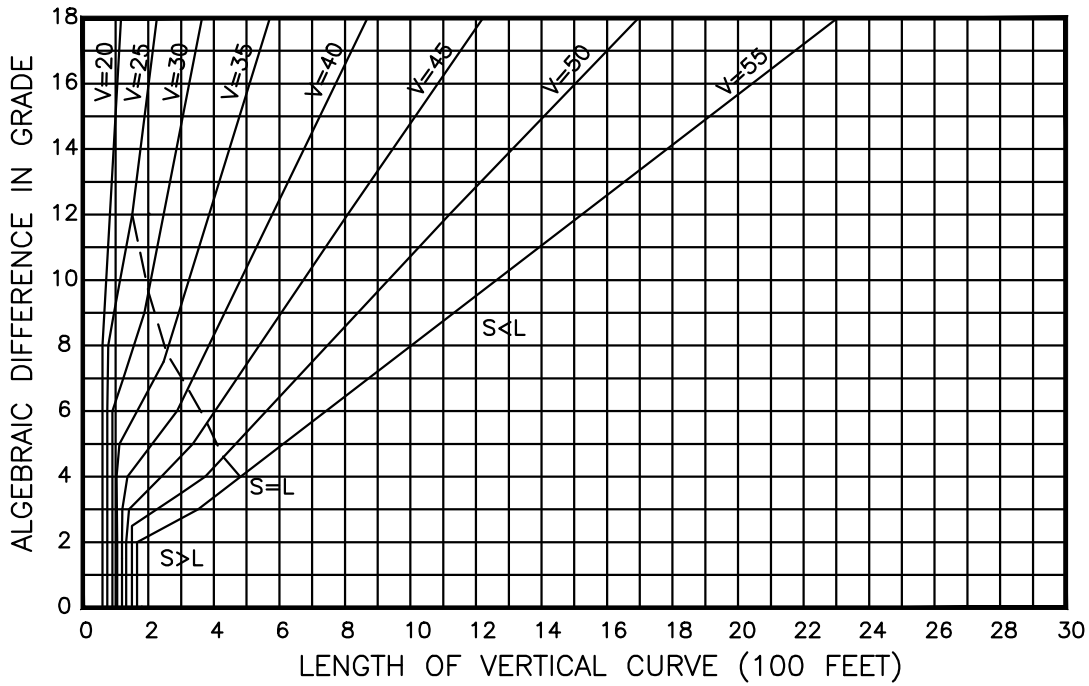


| DESIGN SPEED (MPH) | DESIRABLE MINIMUM STOPPING DISTANCE (FEET) | MINIMUM LENGTH (FEET) |
|---|---|---|
| 20 | 115 | 60 |
| 25 | 155 | 75 |
| 30 | 200 | 90 |
| 35 | 250 | 105 |
| 40 | 305 | 120 |
| 45 | 360 | 135 |
| 50 | 425 | 150 |
| 55 | 495 | 165 |
| 60 | 570 | 180 |

NOTES:

1. L=MINIMUM LENGTH OF CURVE BASED ON MINIMUM STOPPING SIGHT DISTANCE.
2. BASED ON FIGURE. 650-11 WSDOT DESIGN MANUAL.

APPROVED BY 12/28/16

MARYSVILLE CITY ENGINEER DATE

CITY OF Marysville WASHINGTON

# STOPPING SIGHT DISTANCE FOR CREST VERTICAL CURVE

STANDARD PLAN 3-211-001

LAST REVISED 12/28/16

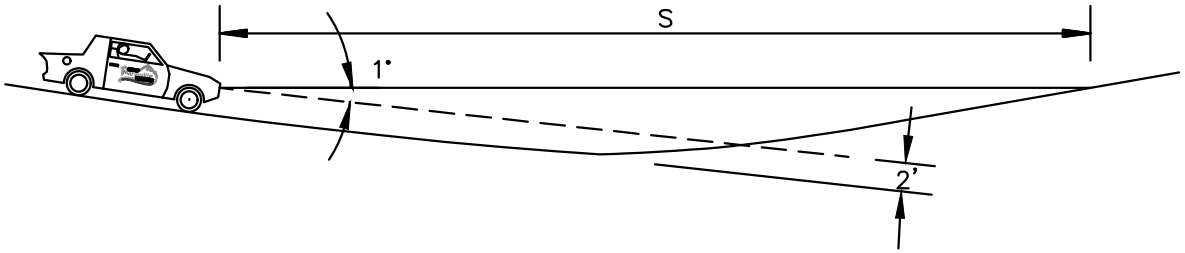


| WHEN S > L | WHEN S < L |
|---|---|
| $L = 2S - \frac{400+3.5S}{A}$ | $L = \frac{AS^2}{400+3.5S}$ |

L = CURVE LENGTH (FEET)
A = ALGEBRAIC GRADE DIFFERENCE (PERCENT)
S = SIGHT DISTANCE (FEET)

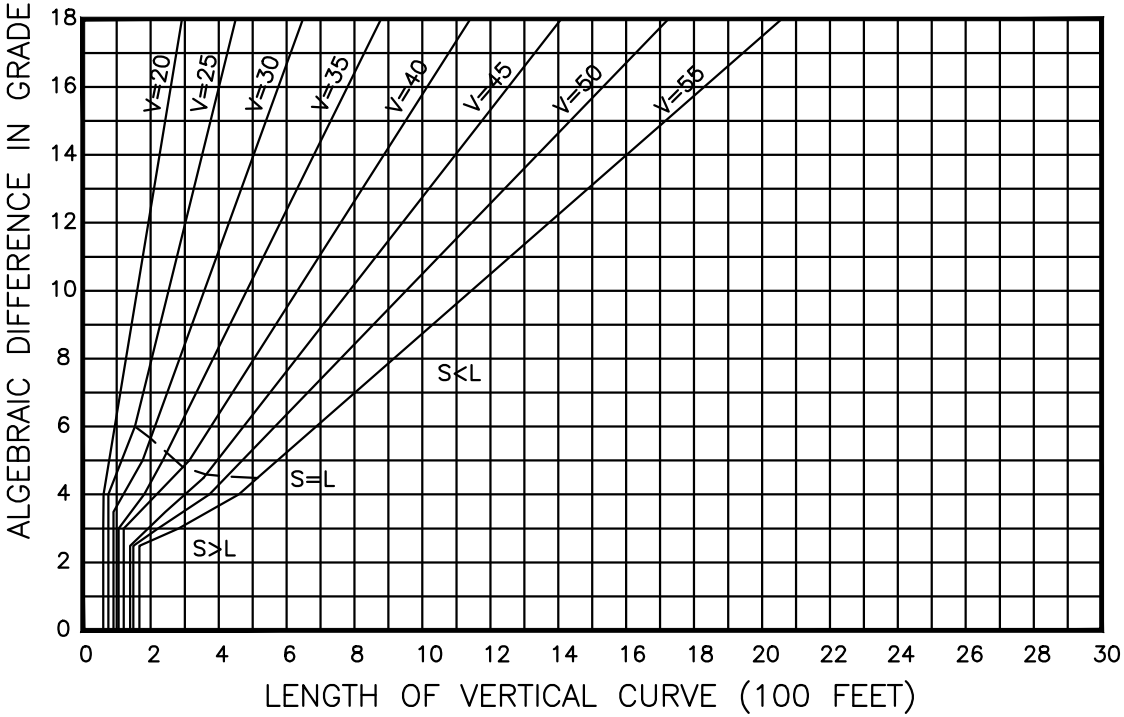


| DESIGN SPEED (MPH) | DESIRABLE MINIMUM STOPPING DISTANCE (FEET) | MINIMUM LENGTH (FEET) |
|---|---|---|
| 20 | 115 | 60 |
| 25 | 155 | 75 |
| 30 | 200 | 90 |
| 35 | 250 | 105 |
| 40 | 305 | 120 |
| 45 | 360 | 135 |
| 50 | 425 | 150 |
| 55 | 495 | 165 |
| 60 | 570 | 180 |

NOTES:

1. L=MINIMUM LENGTH OF CURVE BASED ON MINIMUM STOPPING SIGHT DISTANCE.
2. BASED ON FIGURE. 650-12 WSDOT DESIGN MANUAL.

APPROVED BY 12/28/16

MARYSVILLE CITY ENGINEER DATE

CITY OF Marysville WASHINGTON

# STOPPING SIGHT DISTANCE FOR SAG VERTICAL CURVE

STANDARD PLAN 3-211-002

LAST REVISED 12/28/16

NOTES:

1. AT ANY INTERSECTION OF A PRIVATE ROAD/ACCESS POINT WITH A CITY ROAD OR A CITY ROAD WITH A CITY ROAD, THERE MUST BE A SIGHT DISTANCE TRIANGLE WHICH PROVIDES AN UNOBSTRUCTED LINE OF SIGHT FROM THE INTERSECTING ROAD EDGE OF TRAVELED WAY (POINT A) TO A POINT IN THE TRAVELED WAY (POINT B) AT LEAST EQUAL TO THE REQUIRED SIGHT DISTANCE d. SEE SECTIONS 201, 202, 203, 204 AND STANDARD PLAN 3-212-002.

2. THE DRIVER'S EYE TO DETERMINE LINE OF SIGHT AT INTERSECTIONS IS 3.5 FEET ABOVE THE PAVEMENT, WITH AN OBJECT HEIGHT OF 4.25 FEET ABOVE THE PAVEMENT.

3. THE EDGE OF TRAVELED WAY IS DEFINED AS THE FACE OF CURB FOR ROADS THAT ARE OR WILL BE CONSTRUCTED TO URBAN STANDARDS AND THE EDGE OF PAVEMENT (NOT SHOULDER) FOR ROADS THAT ARE, OR WILL BE CONSTRUCTED TO RURAL STANDARDS. THE AREA WITHIN THE SIGHT DISTANCE TRIANGLE MUST BE FREE FROM ANY SIGHT OBSCURING OBJECTS WITH THE LINE OF SIGHT AT LEAST 18 INCHES ABOVE THE GROUND AND/OR THE TOP OF ANY PROPOSED VEGETATION ALONG THE LINE OF SIGHT.

4. THE DRIVER'S EYE LOCATION MAY BE REDUCED TO A MINIMUM OF 10 FEET BEHIND THE TRAVELED WAY, AT THE DISCRETION OF THE CITY ENGINEER, WHERE THE REDUCTION IN DRIVER'S EYE LOCATION WILL NOT ADVERSELY AFFECT SAFETY AND/OR OPERATION. SOME EXAMPLES OF SITUATIONS WHERE THE ENGINEER'S DISCRETION MAY BE USED ARE: AN INTERSECTION ON THE OUTSIDE OF A HORIZONTAL CURVE; AN INTERSECTION WHERE ONE APPROACH IS IN A CUT OR FILL; OR WHERE A BRIDGE RAILING OR ABUTMENT WOULD OBSCURE THE LINE OF SIGHT FROM 15 FEET BACK BUT NOT FROM 10 FEET BACK.

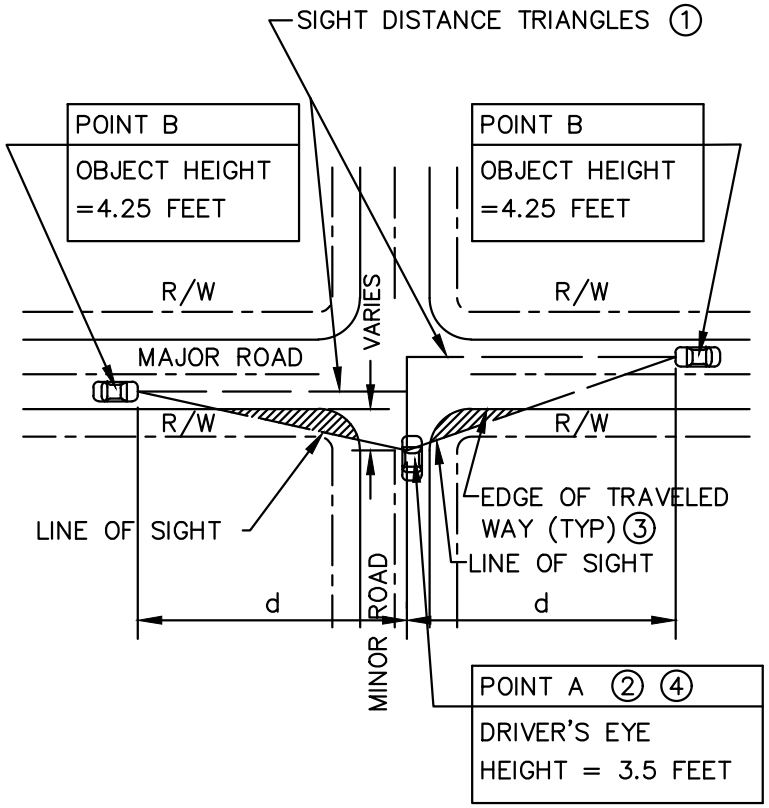


**LEGEND**

OBSTRUCTION FREE ZONE.

d SIGHT DISTANCE REQUIRED

APPROVED BY 12/28/16

MARYSVILLE CITY ENGINEER DATE

CITY OF Marysville WASHINGTON

# ENTERING SIGHT DISTANCE

STANDARD PLAN 3-212-001

LAST REVISED 12/28/16

| | LOCAL ACCESS STREET | NEIGHBORHOOD COLLECTORS | ARTERIAL STREETS | SETBACK DISTANCE POINT A (FEET) |
|---|---|---|---|---|
| PRIVATE RESIDENTIAL DRIVEWAY/ROAD | SSD | SSD | ESD | 10' |
| PRIVATE COMMERCIAL DRIVEWAY | ESD | ESD | ESD | 15' |
| ALLEY | ESD | ESD | ESD | 15' |
| LOCAL ACCESS STREET | ESD | ESD | ESD | 20' |
| NEIGHBORHOOD COLLECTORS | ESD | ESD | ESD | 20' |
| ARTERIAL STREETS | ESD | ESD | ESD | 20' |

NOTE:
REFER TO STANDARD PLAN 3–212–001
SSD – STOPPING SIGHT DISTANCE
ESD – ENTERING SIGHT DISTANCE

APPROVED BY

12/28/16

MARYSVILLE CITY ENGINEER DATE

CITY OF Marysville WASHINGTON

# ENTERING SIGHT DISTANCE TABLE

STANDARD PLAN 3–212–002

LAST REVISED 12/28/16

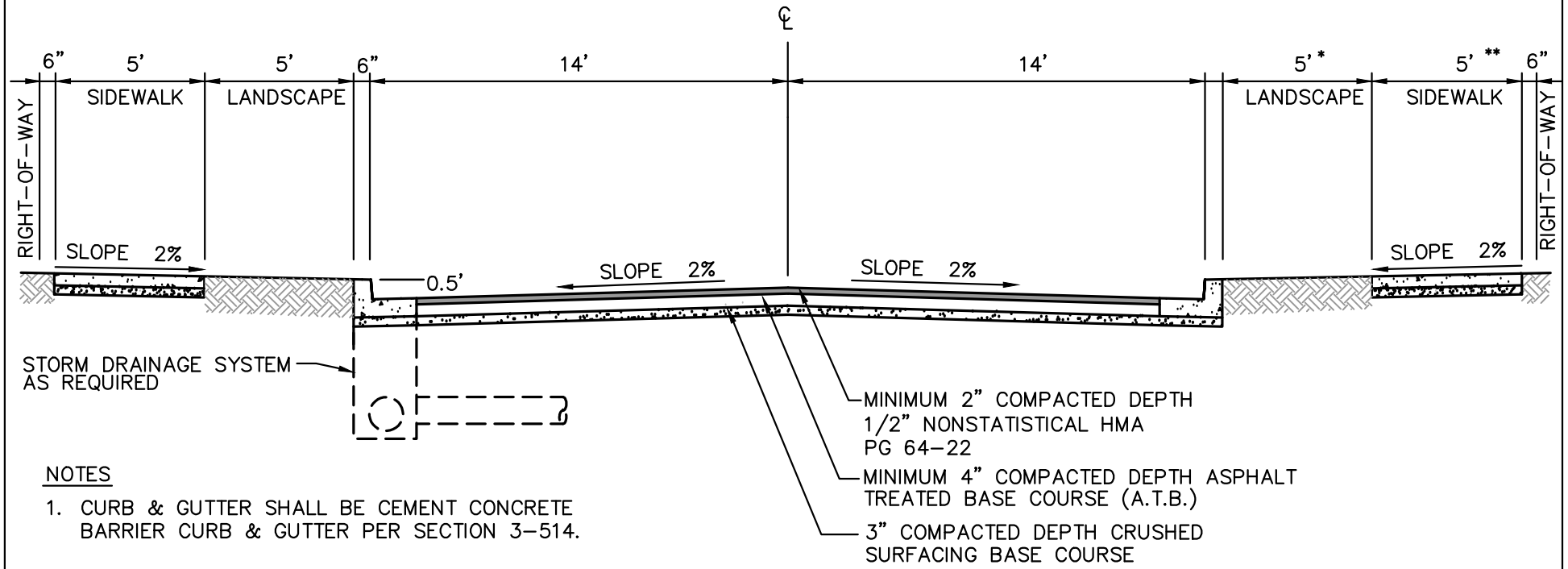


NOTES

1. CURB & GUTTER SHALL BE CEMENT CONCRETE BARRIER CURB & GUTTER PER SECTION 3-514.
2. CURB AND SIDEWALK JOINTS AS PER SECTION 3-515.
3. THIS DRAWING ILLUSTRATES A MINIMUM ASPHALT CONCRETE ROAD SECTION. DESIGN FOR RESIDENTIAL ACCESS STREETS SHALL BE IN ACCORDANCE WITH SECS. 3-401 AND 3-402. ADDITIONAL SUBGRADE TREATMENT MAY BE REQUIRED DEPENDING ON SOIL CONDITIONS.
4. THIS SECTION MAY ONLY BE USED PURSUANT TO MMC 22G.080, PLANNED RESIDENTIAL DEVELOPMENTS.
5. WIDER TRAVEL LANES AND/OR TURN POCKETS MAY BE REQUIRED AT INTERSECTIONS AS DETERMINED BY THE CITY ENGINEER

* LANDSCAPE STRIP MAY BE ELIIMINATED PURSUANT TO PRD ZONING CODE

** SIDEWALK MAY BE ELIMINATED ON ONE SIDE PURSUANT TO PRD ZONING CODE

APPROVED BY

12/28/16

MARYSVILLE CITY ENGINEER — DATE

CITY OF Marysville WASHINGTON

**PRD ACCESS STREET WITH STREET PARKING**

COMBINED CURB, GUTTER & SIDEWALK

STANDARD PLAN 3-218-001

LAST REVISED 12/28/16

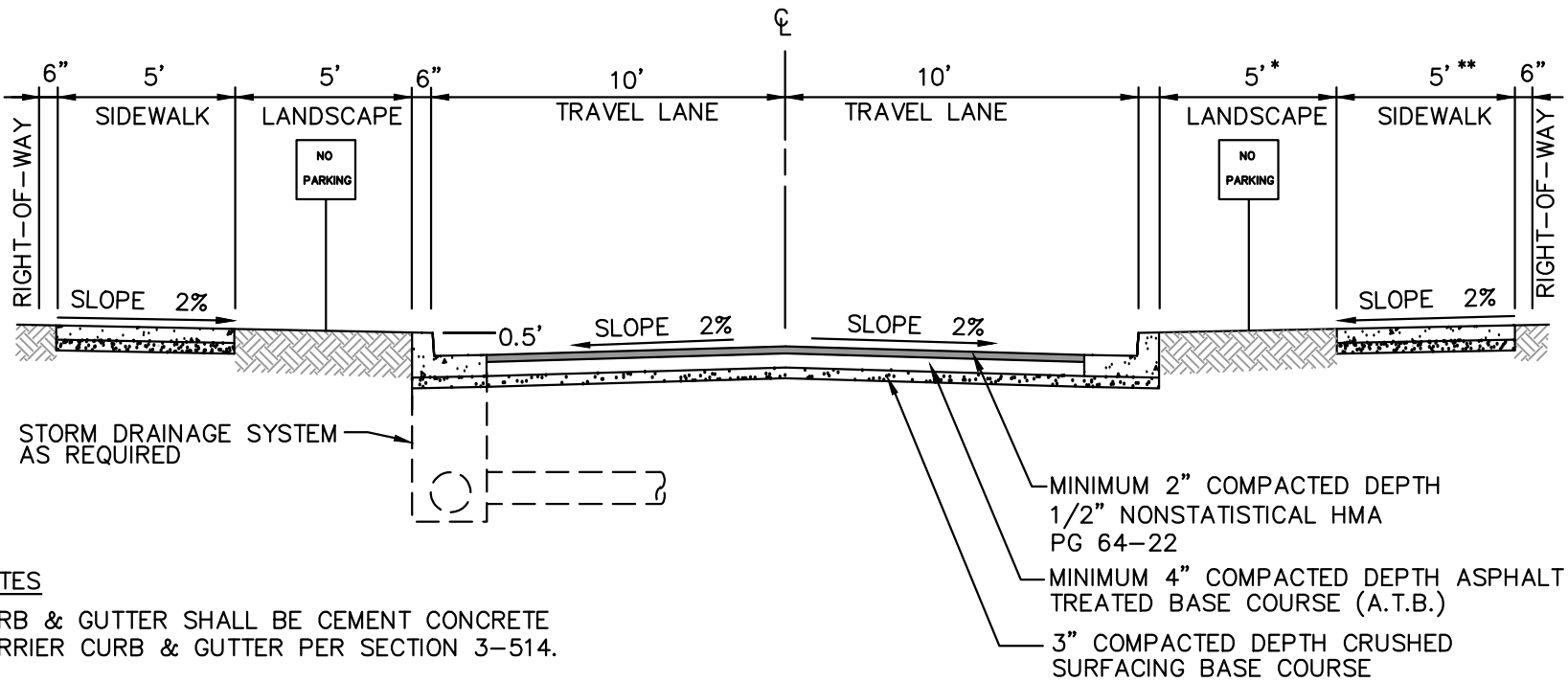


NOTES

1. CURB & GUTTER SHALL BE CEMENT CONCRETE BARRIER CURB & GUTTER PER SECTION 3-514.
2. CURB AND SIDEWALK JOINTS AS PER SECTION 3-515.
3. THIS DRAWING ILLUSTRATES A MINIMUM ASPHALT CONCRETE ROAD SECTION. DESIGN FOR RESIDENTIAL ACCESS STREETS SHALL BE IN ACCORDANCE WITH SECS. 3-401 AND 3-402. ADDITIONAL SUBGRADE TREATMENT MAY BE REQUIRED DEPENDING ON SOIL CONDITIONS.
4. THIS SECTION MAY ONLY BE USED PURSUANT TO MMC 22G.080, PLANNED RESIDENTIAL DEVELOPMENTS.
5. "NO PARKING" SIGNAGE REQUIRED ON BOTH SIDES OF STREET
6. WIDER TRAVEL LANES AND/OR TURN POCKETS MAY BE REQUIRED AT INTERSECTIONS AS DETERMINED BY THE CITY ENGINEER

* LANDSCAPE STRIP MAY BE ELIIMINATED PURSUANT TO PRD ZONING CODE

** SIDEWALK MAY BE ELIMINATED ON ONE SIDE PURSUANT TO PRD ZONING CODE

APPROVED BY

12/28/16

MARYSVILLE CITY ENGINEER DATE

CITY OF Marysville WASHINGTON

**PRD ACCESS STREET**

COMBINED CURB, GUTTER & SIDEWALK

STANDARD PLAN 3-218-002

LAST REVISED 12/28/16

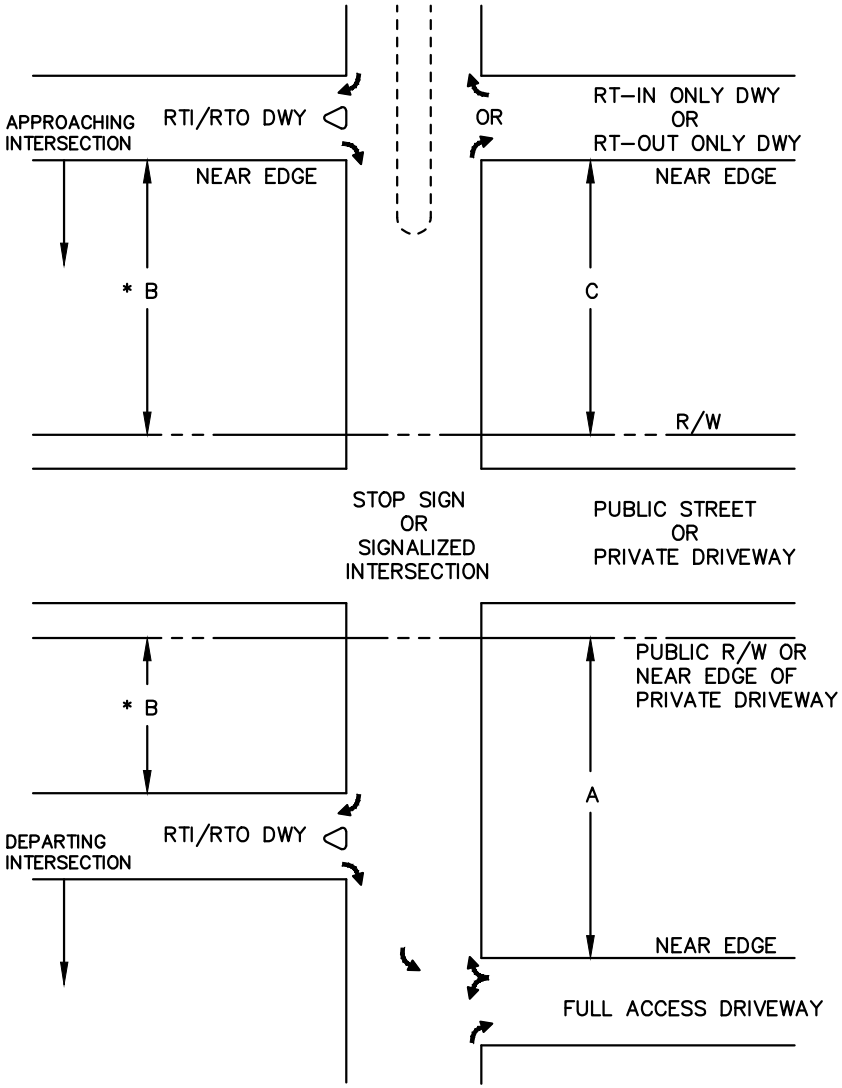


* DIMENSION B FOR RIGHT TURN IN/RIGHT TURN OUT ONLY DRIVEWAYS DEPENDS ON WHICH SIDE OF INTERSECTION DRIVEWAY IS LOCATED (APPROACHING OR DEPARTING)

NOTE

1. SEE TABLE 3-3.1 FOR DIMENSION

APPROVED BY

12/28/16

MARYSVILLE CITY ENGINEER DATE

# ARTERIAL STREET DRIVEWAY LOCATION SPACING

CITY OF Marysville WASHINGTON

STANDARD PLAN 3-301-001

LAST REVISED 12/28/16

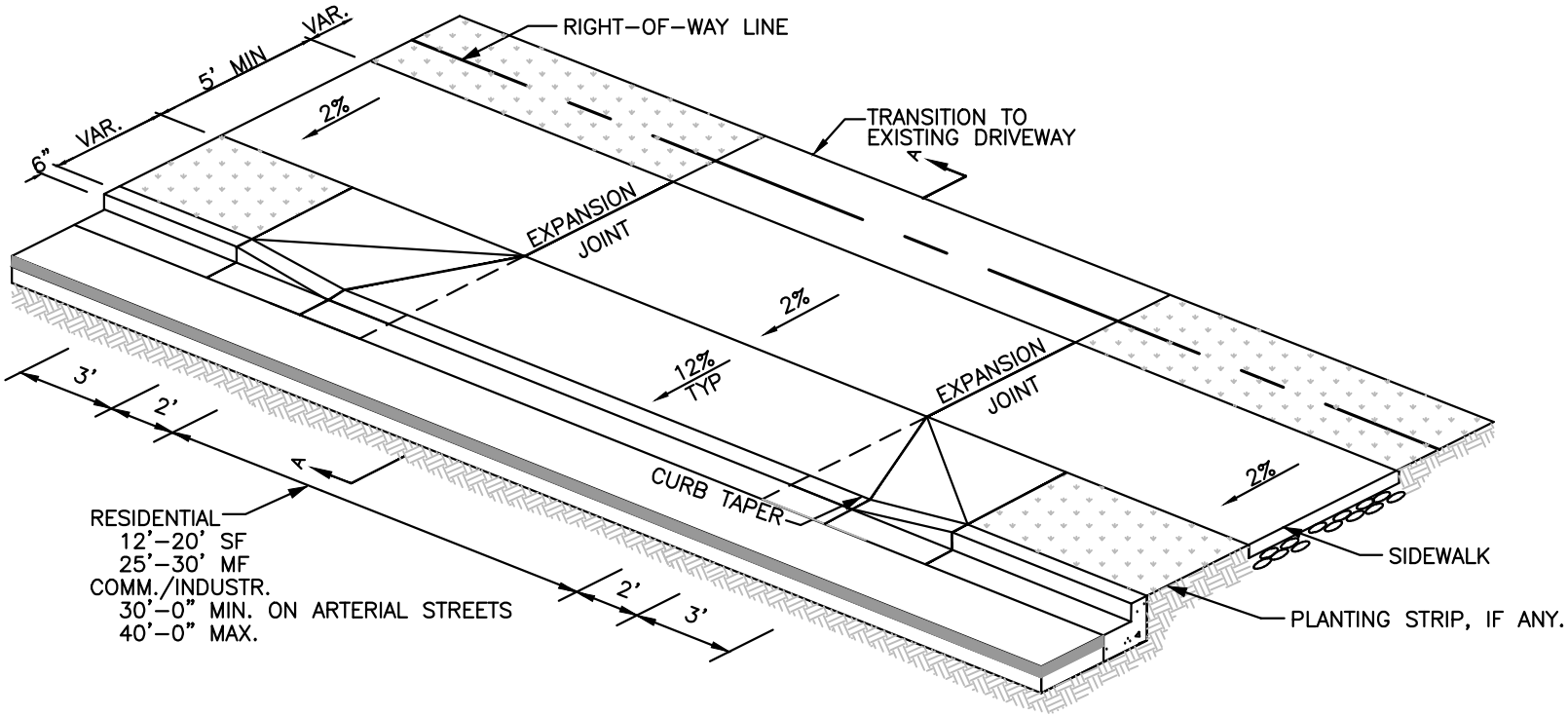


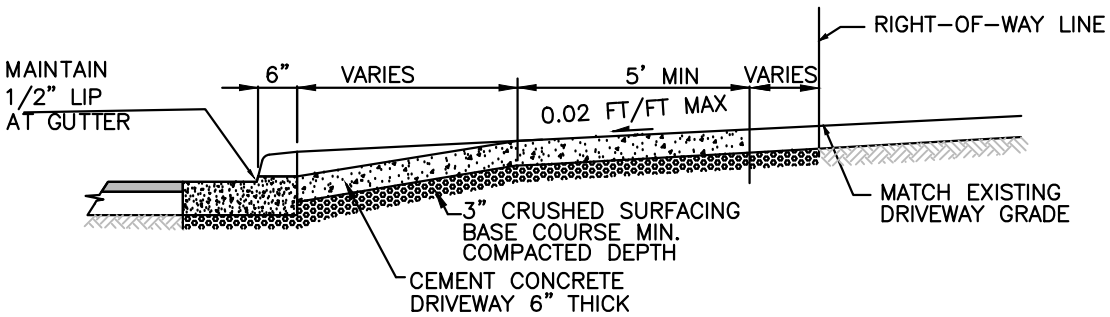


SECTION A-A
NTS

NOTES:

1. COMMERCIAL/INDUSTRIAL DRIVEWAYS WIDER THAN 40' MAY BE APPROVED BY THE ENGINEER CONSIDERING TRAFFIC SAFETY AND NEEDS OF THE ACTIVITY SERVED. ALL COMMERCIAL/INDUSTRIAL DRIVEWAYS SHALL HAVE AN EXPANSION JOINT LOCATED EVERY 15 LINEAL FEET.
2. DRIVEWAYS LIMITED TO 30% OF FRONTAGE

APPROVED BY 12/28/16

MARYSVILLE CITY ENGINEER DATE

CITY OF Marysville WASHINGTON

# CURB & GUTTER SECTION DRIVEWAY TYPE 1

STANDARD PLAN 3-303-001

LAST REVISED 12/28/16

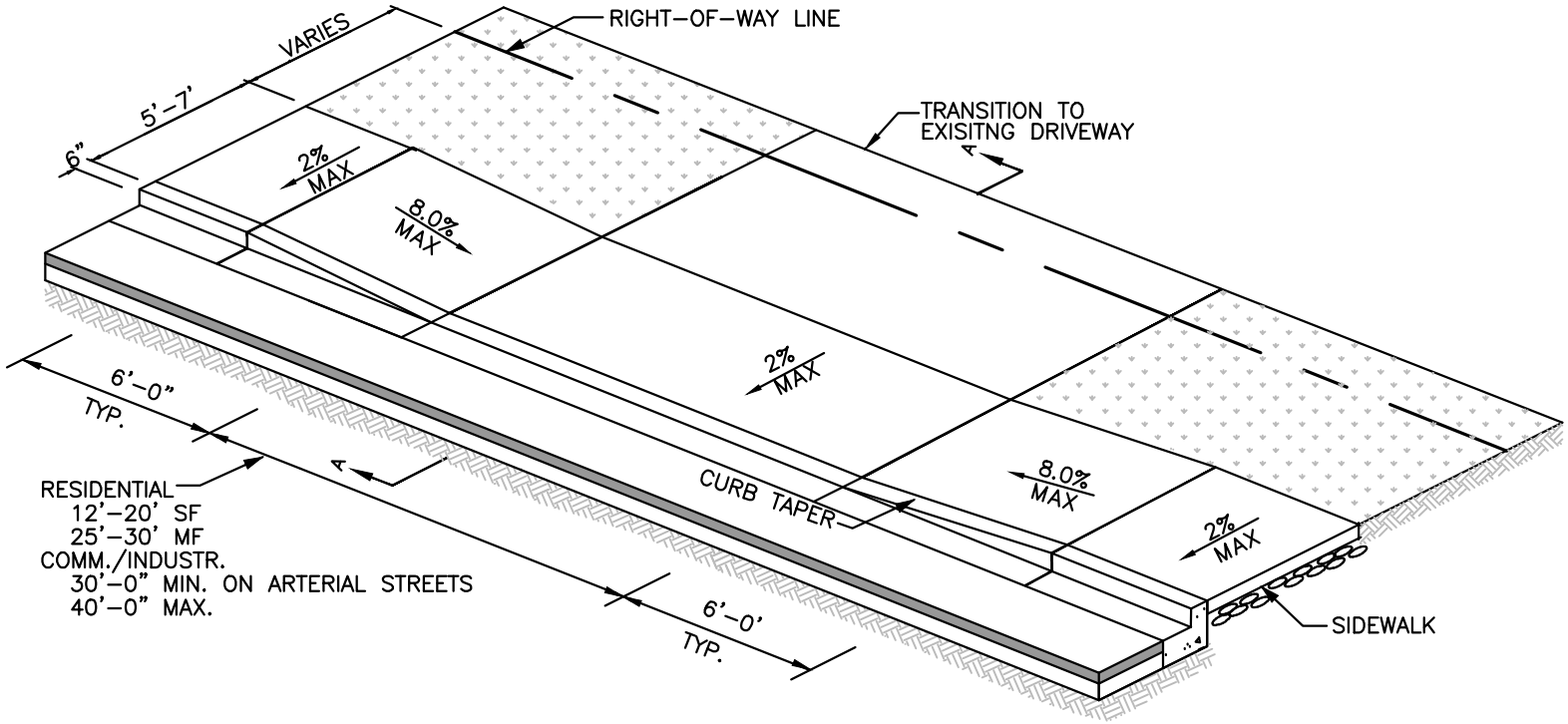


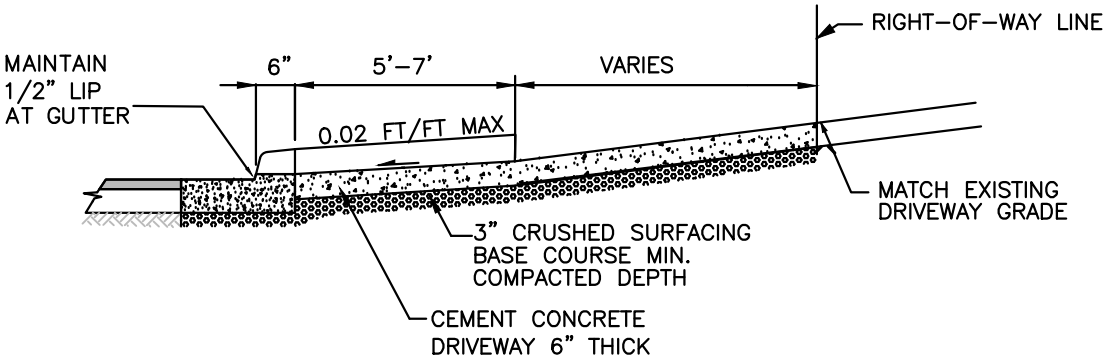


SECTION A–A
NTS

NOTES:

1. COMMERCIAL/INDUSTRIAL DRIVEWAYS WIDER THAN 40' MAY BE APPROVED BY THE ENGINEER CONSIDERING TRAFFIC SAFETY AND NEEDS OF THE ACTIVITY SERVED. ALL COMMERCIAL/INDUSTRIAL DRIVEWAYS SHALL HAVE AN EXPANSION JOINT LOCATED EVERY 15 LINEAL FEET.
2. DRIVEWAYS LIMITED TO 30% OF FRONTAGE

APPROVED BY 12/28/16

MARYSVILLE CITY ENGINEER DATE

CITY OF Marysville WASHINGTON

# CURB & GUTTER SECTION DRIVEWAY TYPE 2

STANDARD PLAN 3–303–001B

LAST REVISED 12/28/16

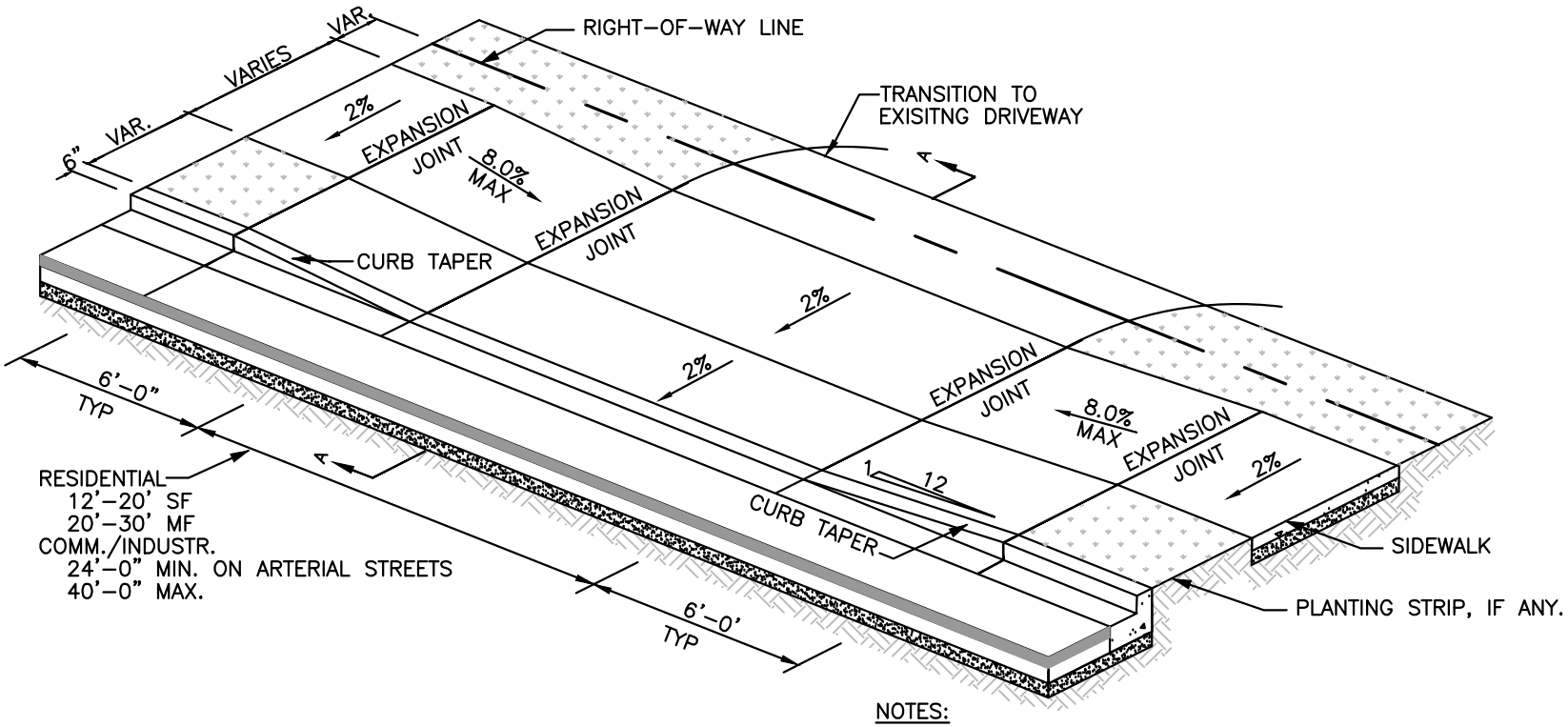


NOTES:

1. A REVERSE SLOPE DRIVEWAY IS SUBJECT TO APPROVAL BY ENGINEER CONSIDERING NEED FOR AND COMPATIBILITY OF THIS FEATURE.
2. COMMERCIAL/INDUSTRIAL DRIVEWAYS WIDER THAN 40' MAY BE APPROVED CONSIDERING TRAFFIC SAFETY AND NEEDS OF THE ACTIVITY SERVED. ALL COMMERCIAL/INDUSTRIAL DRIVEWAYS SHALL HAVE AN EXPANSION JOINT LOCATED EVERY 15 LINEAL FEET.

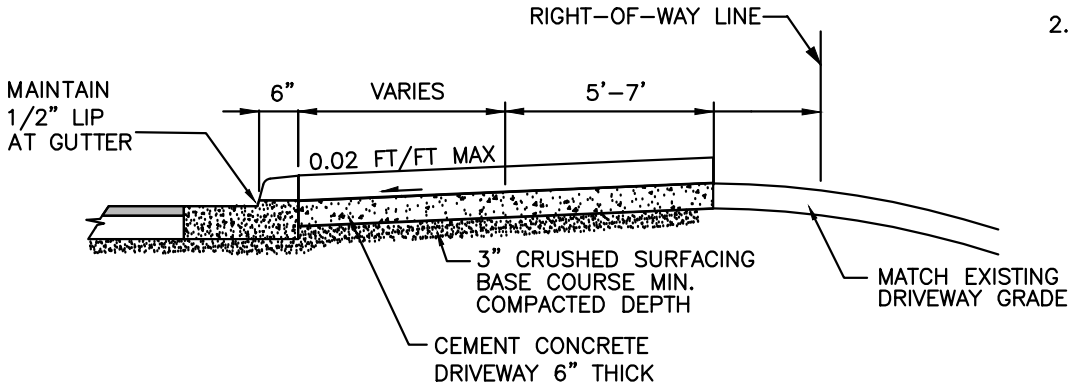


SECTION A–A
NTS

APPROVED BY 12/28/16

MARYSVILLE CITY ENGINEER DATE

CITY OF Marysville WASHINGTON

# DRIVEWAY REVERSE SLOPE

STANDARD PLAN 3–303–002

LAST REVISED 12/28/16

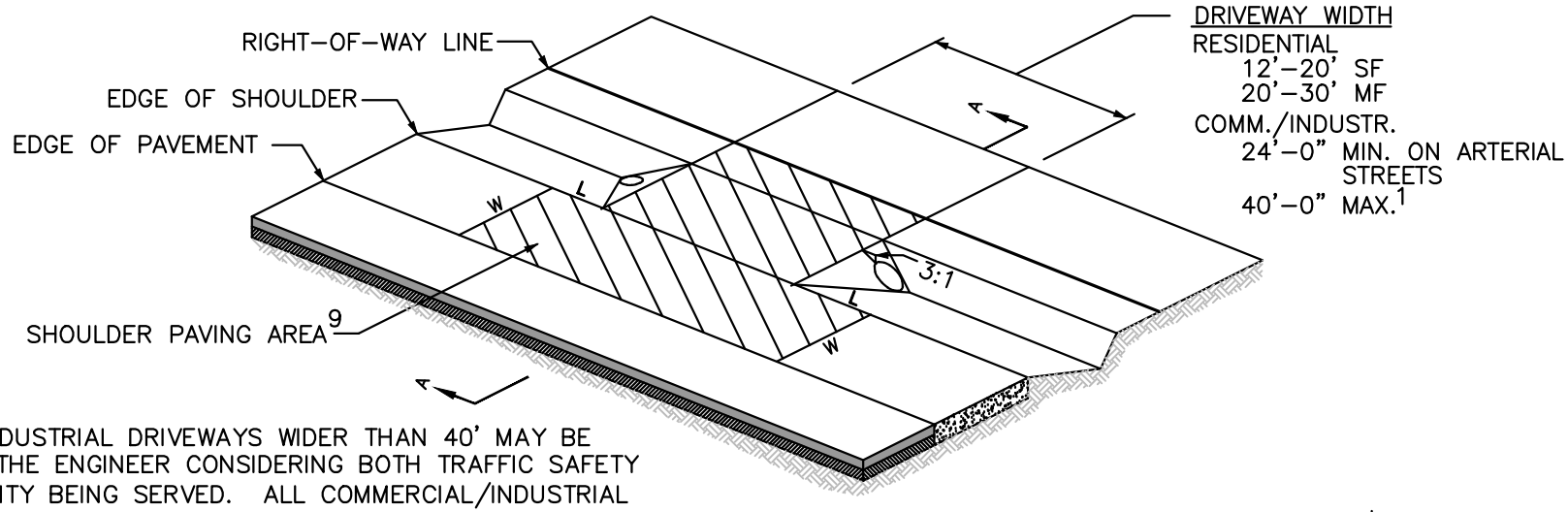


NOTES:

1. COMMERCIAL/INDUSTRIAL DRIVEWAYS WIDER THAN 40' MAY BE APPROVED BY THE ENGINEER CONSIDERING BOTH TRAFFIC SAFETY AND THE ACTIVITY BEING SERVED. ALL COMMERCIAL/INDUSTRIAL DRIVEWAYS SHALL HAVE AN EXPANSION JOINT LOCATED MID-WIDTH.
2. PIPE SHALL BE:
   A. SIZED TO CONVEY COMPUTED STORM WATER RUNOFF, AND
   B. MIN. 12" DIAM., AND
   C. EQUAL TO OR LARGER THAN EXISTING PIPES WITHIN 500' UPSTREAM.
3. EXPOSED PIPE ENDS SHALL BE BEVELED TO MATCH THE SLOPE FACE AND PROJECT NO MORE THAN 2" BEYOND SLOPE SURFACE. PROJECTING HEADWALLS ARE NOT ACCEPTABLE.
3. DUCTILE IRON PIPE SHALL HAVE MIN. COVER OF 12" TO FINISH GRADE. ALL OTHER TYPES OF PIPE SHALL HAVE MIN. 24" COVER.
4. PIPE SHALL BE INSTALLED IN A STRAIGHT UNIFORM ALIGNMENT AT A MIN. 0.5% SLOPE (0.5 FT. PER 100 FT.) WITH THE DOWNSTREAM END LOWER THAN THE UPSTREAM END.
5. PIPE MAY BE OMITTED IF ROADSIDE DITCH DOES NOT EXIST AND DRIVEWAY DOES NOT BLOCK NATURAL FLOW.
6. PIPE MAY BE OMITTED IF ROADSIDE DITCH DOES NOT EXIST AND DRIVEWAY DOES NOT BLOCK NATURAL FLOW.
7. DRIVEWAY SLOPE SHALL MATCH TO BACK EDGE OF SHOULDER, BUT SHOULDER SLOPE AND EDGE OF SHOULDER SHALL NOT BE ALTERED AS A RESULT OF DRIVEWAY CONSTRUCTION.
8. PAVED DRIVEWAYS SHALL BE PAVED THROUGH RIGHT-OF-WAY WITH A.C.P. OR B.S.T., BUT NOT P.C.C.
9. GRAVEL DRIVEWAYS SHALL BE PAVED BETWEEN THE EDGE OF PAVEMENT AND R/W WITH A.C.P. OR B.S.T. ONLY WITH DIMENSIONS L=W.

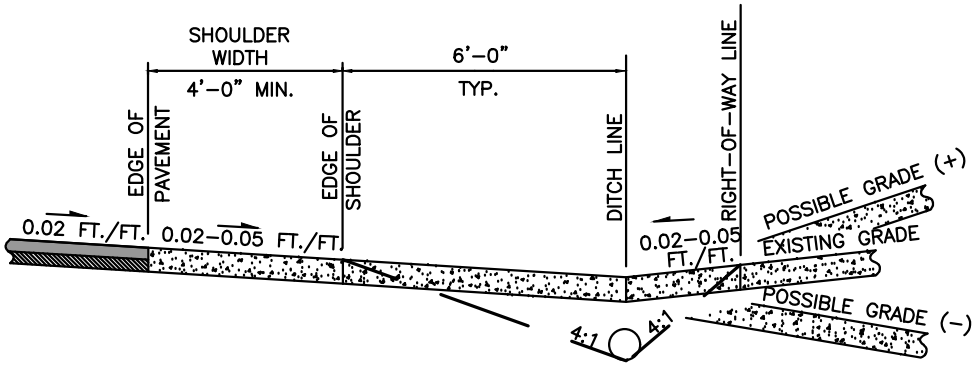


SECTION A-A

APPROVED BY 12/28/16

MARYSVILLE CITY ENGINEER DATE

# SHOULDER & DITCH SECTION DRIVEWAY

CITY OF Marysville WASHINGTON

STANDARD PLAN 3-303-003

LAST REVISED 12/28/16

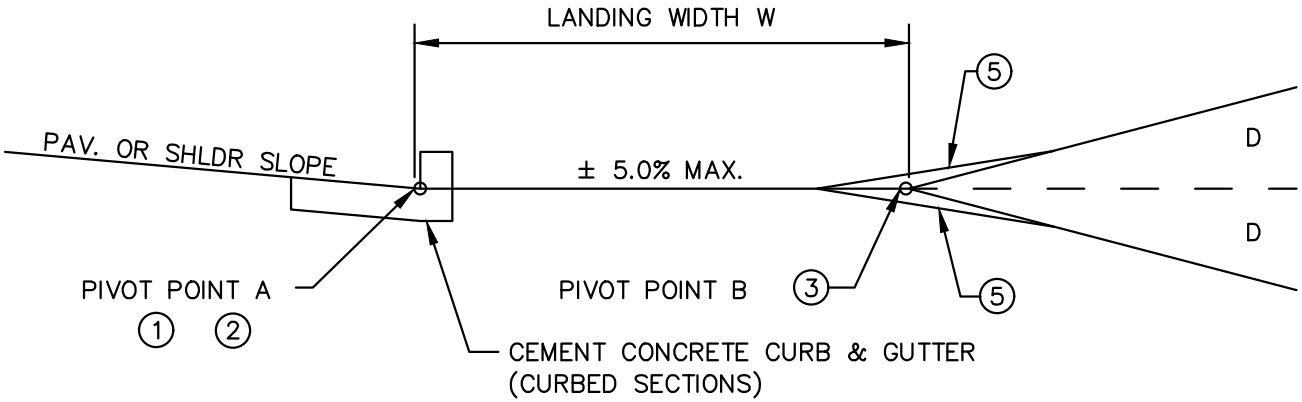


| TYPE OF ACCESS | ACCESSING | LANDING WIDTH W (1) | ACCESS GRADE D |
|---|---|---|---|
| RESIDENTIAL | NON–ARTERIAL | 5' MIN., 20' DESIRABLE | ± 15% MAX. |
| RESIDENTIAL | ARTERIAL | 5' MIN., 20' DESIRABLE | ± 7% MAX. |
| COMMERCIAL/INDUSTRIAL | NON–ARTERIAL | 10' MIN., 30' DESIRABLE | ± 8% MAX. |
| COMMERCIAL/INDUSTRIAL | ARTERIAL | 10' MIN., 30' DESIRABLE | ± 5% MAX. |

NOTES:

(1) WHEN ACCESSING CURBED ROADWAYS, MAINTAIN PAVEMENT SLOPE TO PIVOT POINT A.

(2) WHEN ACCESSING SHOULDERED ROADWAYS, MAINTAIN SHOULDER SLOPE TO PIVOT POINT A.

(3) ACCESS POINT GRADE SHALL BE MEASURED FROM PIVOT POINT B.

(4) DESIRABLE WIDTHS SHOWN WILL BE THE REQUIREMENT, UNLESS THE APPLICANT DEMONSTRATES TO THE ENGINEER'S SATISFACTION THAT THEY CANNOT BE OBTAINED.

(5) VERTICAL CURVES NOT TO EXCEED A 3–1/4 INCH HUMP OR A 2 INCH DEPRESSION IN A 10 FOOT CHORD.

APPROVED BY 12/28/16

MARYSVILLE CITY ENGINEER DATE

CITY OF Marysville WASHINGTON

# DRIVEWAY VERTICAL ALIGNMENT

STANDARD PLAN 3–303–004

LAST REVISED 12/28/16

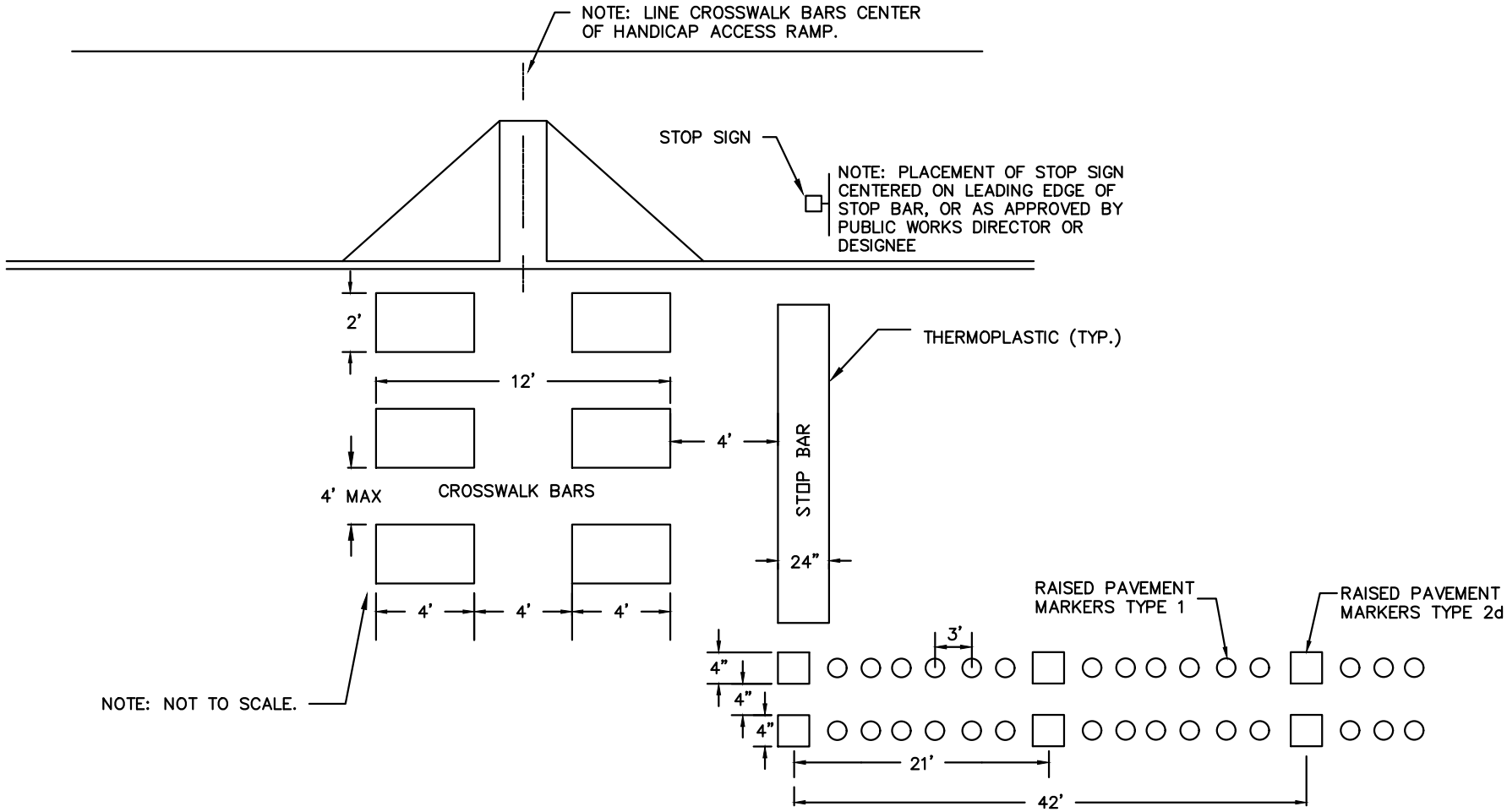


APPROVED BY

12/28/16

MARYSVILLE CITY ENGINEER DATE

# INTERSECTION PAVEMENT MARKERS PLACEMENT

CITY OF Marysville WASHINGTON

STANDARD PLAN 3-406-001

LAST REVISED 12/28/16

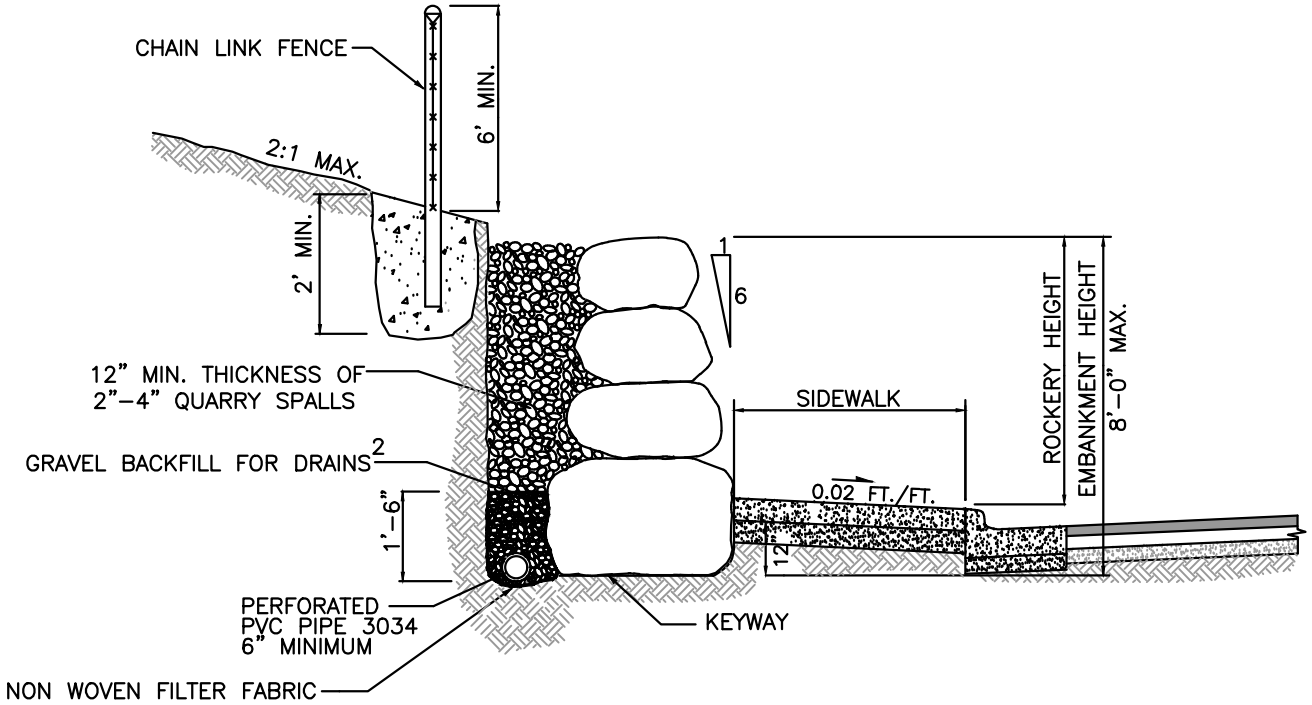


NOTE:
EMBANKMENT HEIGHT IN EXCESS OF 4'–0" REQUIRES BUILDING PERMIT AND SET OF STAMPED ENGINEERING PLANS

NOTES:

1. GRAVEL BACKFILL FOR WALLS SHALL MEET WSDOT 9–03.12[2]
2. GRAVEL BACKFILL FOR DRAINS SHALL MEET WSDOT 9–03.12[4]
3. IF ROCKERY OR RETAINING WALL IS BEHIND ROLLED CURB OR ON A RURAL SECTION, FACE OF ROCKERY OR RETAINING WALL MUST BE BEYOND THE CLEAR ZONE PER WSDOT DESIGN MANUAL.
4. CHAIN LINK FENCE SHALL COMPLY WITH STD. PLAN 3–501–007 AND IS REQUIRED WHEN ROCKERY HEIGHT IS 30" OR GREATER AND ROCKERY IS LOCATED ON PUBLIC RIGHT–OF–WAY OR EASEMENT.
5. MAXIMUM HEIGHT OF ROCKERY IS 8' UNLESS APPROVED BY THE CITY ENGINEER.

APPROVED BY 12/28/16
MARYSVILLE CITY ENGINEER DATE

CITY OF Marysville WASHINGTON

ROCK FACING, CUT SECTION

STANDARD PLAN 3–501–001

LAST REVISED 12/28/16

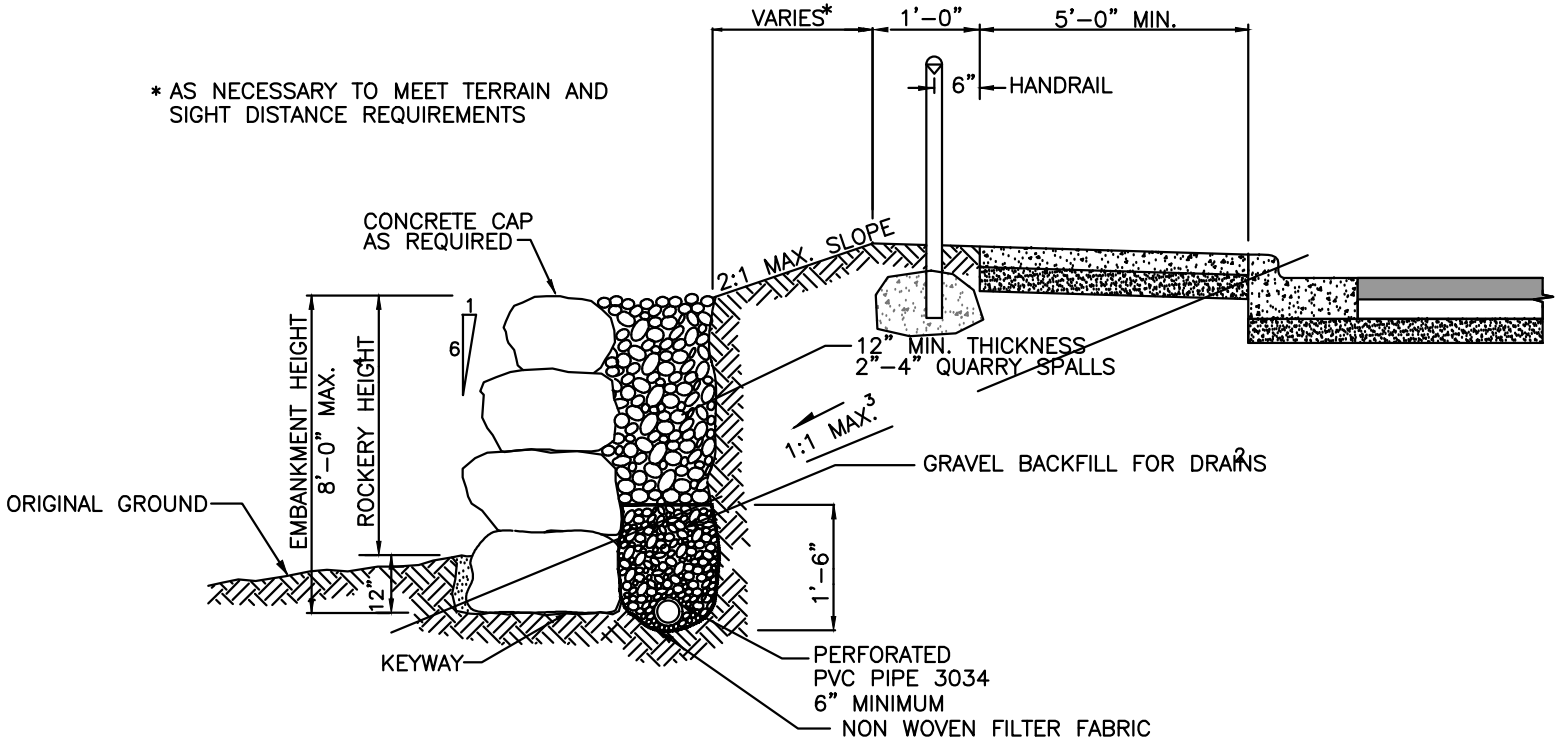


NOTE:
EMBANKMENT HEIGHT IN EXCESS OF 4'–0" REQUIRES BUILDING PERMIT AND SET OF STAMPED ENGINEERING PLANS

NOTES:

1. GRAVEL BACKFILL FOR WALLS SHALL MEET WSDOT 9–03.12[2].
2. GRAVEL BACKFILL FOR DRAINS SHALL MEET WSDOT 9–03.12[4].
3. FLATTER SLOPE MAY BE REQUIRED IN LESS STABLE SOIL.
4. HANDRAIL REQUIRED WHEN ROCKERY HEIGHT IS 30" OR GREATER. SEE DWG. NO. 3–501–006.
5. FOR ROCKERY HEIGHTS EXCEEDING 4', SEE DWG. NO. 3–501–004.
6. TRAFFIC BARRIERS MAY BE REQUIRED ON ROADS WITH POSTED SPEED LIMITS OF 35 MPH OR GREATER, WHERE ROCKERY HEIGHTS EXCEED 6'. SEE CHAPTER 7 OF THE WSDOT DESIGN MANUAL.

APPROVED BY 12/28/16

MARYSVILLE CITY ENGINEER DATE

CITY OF Marysville WASHINGTON

# ROCK FACING, FILL SECTION

STANDARD PLAN 3–501–002

LAST REVISED 12/28/16

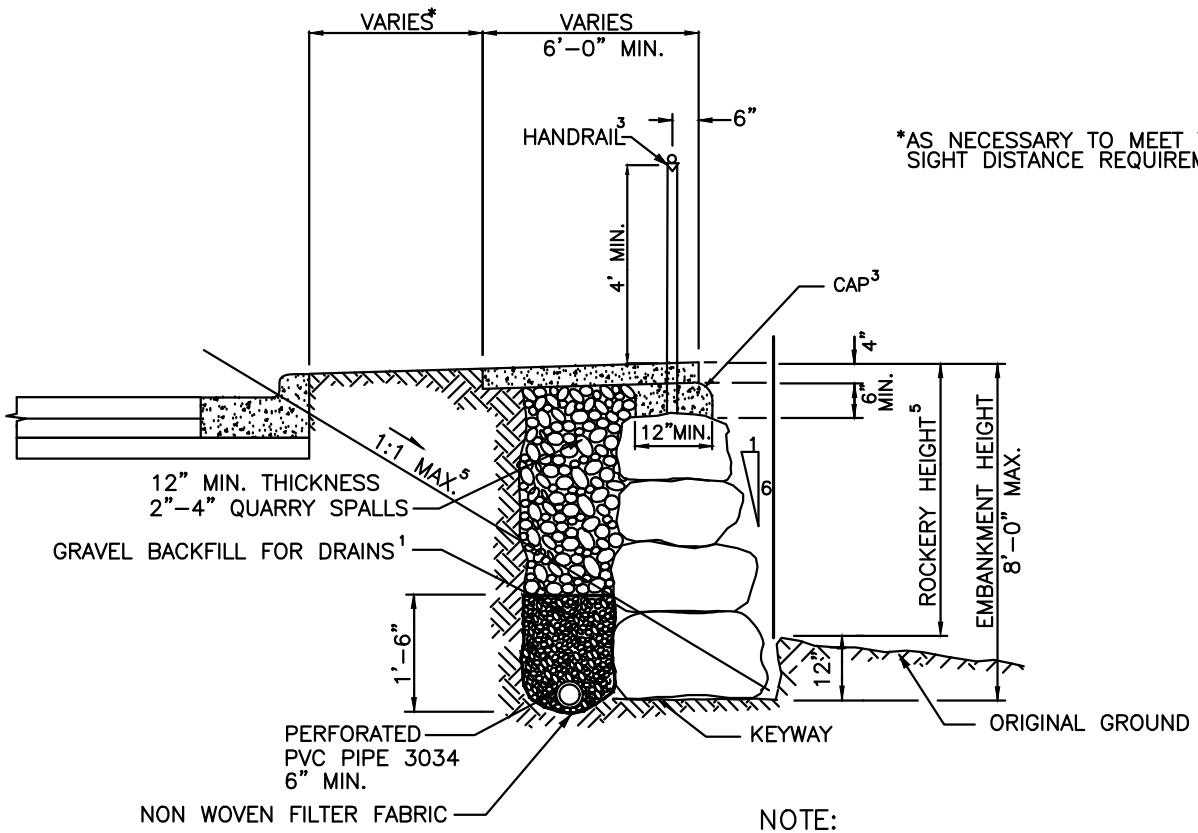


*AS NECESSARY TO MEET TERRAIN AND SIGHT DISTANCE REQUIREMENTS.

NOTE:
EMBANKMENT HEIGHT IN EXCESS OF 4'-0" REQUIRES BUILDING PERMIT AND SET OF STAMPED ENGINEERING PLANS

NOTES:

1. GRAVEL BACKFILL FOR WALLS SHALL MEET WSDOT 9-03.12[2].
2. GRAVEL BACKFILL FOR DRAINS SHALL MEET WSDOT 9-03.12[4].
3. HANDRAIL REQUIRED WHEN ROCKERY HEIGHT IS 30" OR GREATER. SEE DWG. 3-501-006
4. CAP SHALL BE CONCRETE CLASS 3000.
5. FLATTER SLOPE MAY BE REQUIRED IN LESS STABLE SOILS.
6. FOR ROCKERY HEIGHTS EXCEEDING 4', SEE DWG. NO. 3-501-004.
7. TRAFFIC BARRIERS MAY BE REQUIRED ON ROADS WITH POSTED SPEED LIMITS OF 35 MPH OR GREATER. SEE CHAPTER 7 OF THE WSDOT DESIGN MANUAL.

APPROVED BY 12/28/16

MARYSVILLE CITY ENGINEER DATE

CITY OF Marysville WASHINGTON

# ROCK FACING UNDER SIDEWALK

STANDARD PLAN 3-501-003

LAST REVISED 12/28/16

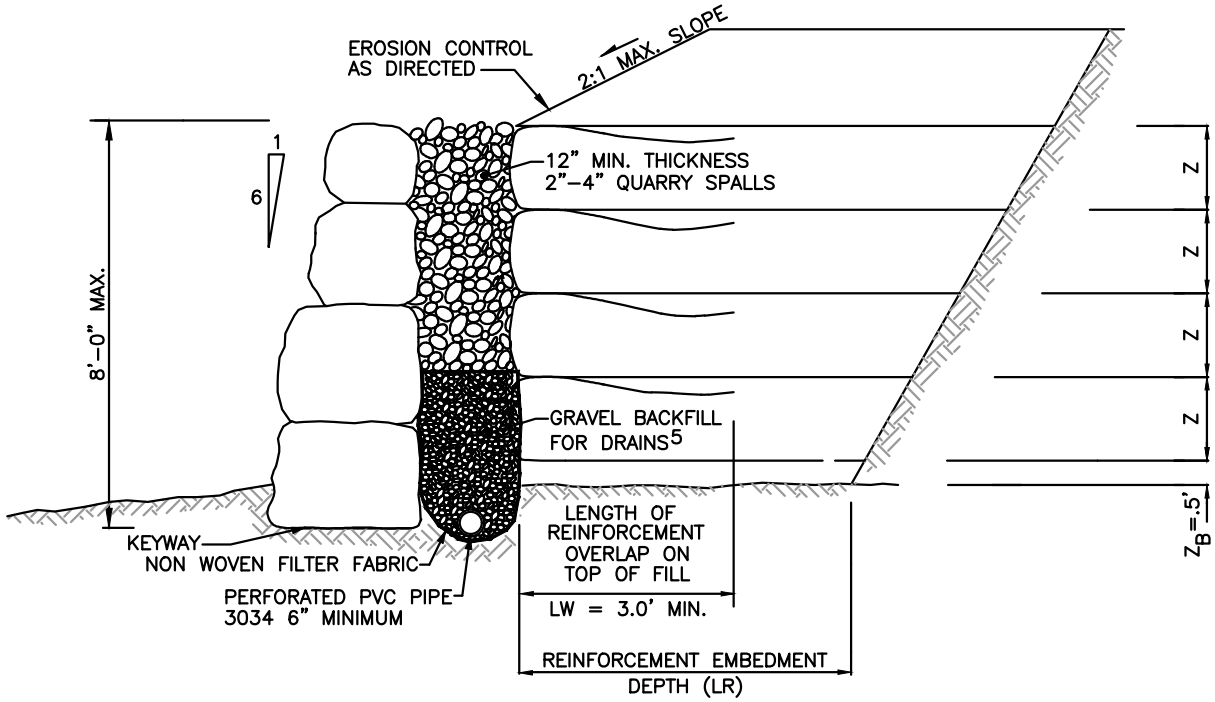


NOTES:

1. ROCKERY FACINGS ARE TO BE CONSTRUCTED PER SEC. 3-501.
2. THE WALL FOUNDATION IS TO BE CLEARED OF ORGANIC MATTER AND DEBRIS AND THE UNDERLYING MINERAL SOIL COMPACTED TO 95 PERCENT OF THE MAX. DRY DENSITY. THE EMBANKMENT MATERIAL IS TO BE GRAVEL BORROW MEETING THE REQUIREMENTS OF 9-03.14 OF THE WSDOT STANDARDS. THE BACKFILL IS TO BE PLACED IN THIN LIFTS, NOT EXCEEDING SIX INCHES IN THICKNESS AND COMPACTED TO 95 PERCENT OF THE MAX. DRY DENSITY.
3. GEOSYNTHETIC FABRIC OR GEOGRID REQUIREMENTS INCLUDING TYPE, VERTICAL SPACING (Z), AND EMBEDMENT (LR), WILL BE DETERMINED ON A ROCKERY BY ROCKERY BASIS BY A PROFESSIONAL ENGINEER.
4. $Z_B$ IS HEIGHT OF FIRST LAYER OF REINFORCEMENT ABOVE COMPACTED SUBGRADE ELEVATION.
5. GRAVEL BACKFILL FOR DRAINS SHALL MEET WSDOT 9-03.12[4]

NOTE:
EMBANKMENT HEIGHT IN EXCESS OF 4'-0" REQUIRES BUILDING PERMIT AND SET OF STAMPED ENGINEERING PLANS

APPROVED BY 12/28/16

MARYSVILLE CITY ENGINEER DATE

CITY OF Marysville WASHINGTON

**ROCK FACING, FILL SECTION REINFORCEMENT IN EXCESS OF 4' HEIGHT**

STANDARD PLAN 3-501-004

LAST REVISED 12/28/16

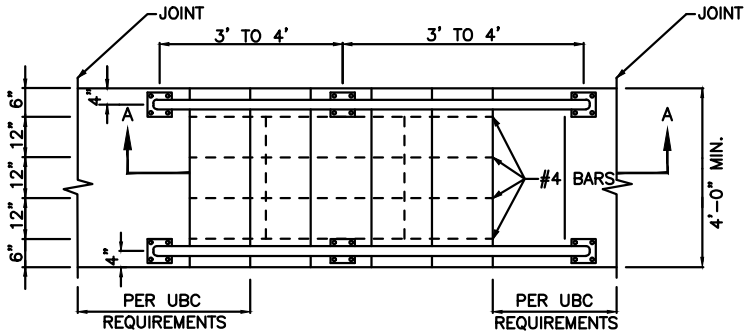


CONCRETE STEPS
PLAN

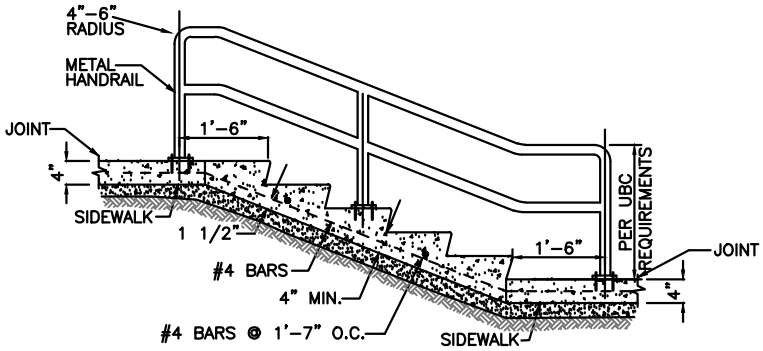


CONCRETE STEPS
SECTION A-A

NOTES FOR CONCRETE STEPS:

1. CONCRETE: CEMENT CONCRETE CLASS 3000.
2. ALL STEPS: PER UBC REQUIREMENTS.
3. RISERS: PER UBC REQUIREMENTS.
4. TREADS: PER UBC REQUIREMENTS.
5. LOCATION OF METAL HANDRAIL AND GUARDRAIL PER UBC REQUIREMENTS, SEE NOTES BELOW.
6. REINFORCING BARS SHALL MEET THE REQUIREMENTS OF ASTM A-615, GRADE 60 .
7. SEE UBC SEC. 3306.
8. MAX. VERTICAL DISTANCE BETWEEN LANDINGS PER UBC REQUIREMENTS.

NOTES FOR HANDRAILS AND PEDESTRIAN GUARDRAILS:

1. GALVANIZED STEEL OR ALUMINUM.
2. ROUND OR OVAL PIPE, SIZE PER UBC REQUIREMENTS.
3. WELDED, WITH SMOOTH SURFACE AND JOINTS.
4. POSTS SET IN CLASS 3000 CONCRETE A MINIMUM OF 8".
5. SEE UBC SEC. 3306.
6. GALVANIZED STEEL OR ALUMINUM GUARDRAILS WHEN GUARDRAILS ARE REQUIRED BY UBC.

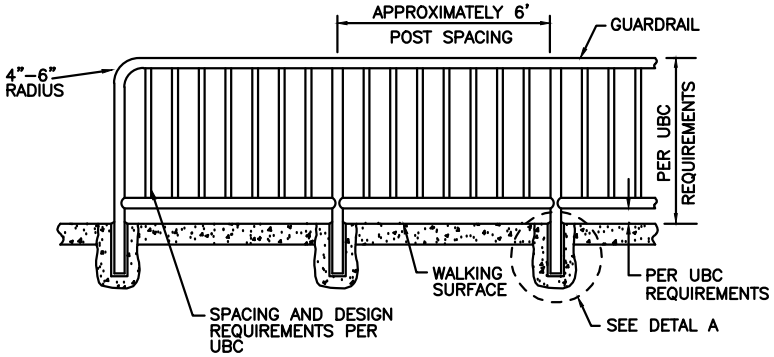


PEDESTRIAN GUARDRAIL SECTION

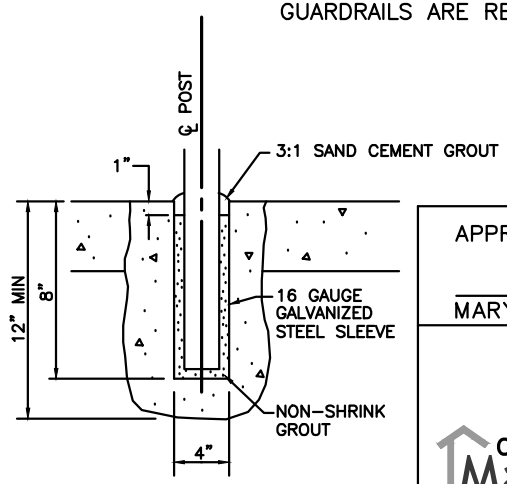


DETAIL A

APPROVED BY 12/28/16

MARYSVILLE CITY ENGINEER DATE

CITY OF Marysville WASHINGTON

# CONCRETE STEPS, METAL HANDRAIL, & GUARDRAIL

STANDARD PLAN 3-501-006

LAST REVISED 12/28/16

## HANDRAILS AND GUARDRAILS (GALVANIZED STEEL)

GALVANIZED HANDRAIL AND GUARDRAIL SHALL BE FABRICATED AND INSTALLED IN ACCORDANCE WITH THESE SPECIAL PROVISIONS AND STANDARD DRAWING.

GALVANIZED STEEL HANDRAIL AND GUARDRAIL SHALL CONFORM TO ASTM DESIGNATION A120. ALL WELDING SHALL CONFORM TO AMERICAN WELDING SOCIETY STRUCTURAL WELDING CODE AWS D1.1–72. AFTER FABRICATION EACH SECTION OF RAILING SHALL BE HOT–DIPPED GALVANIZED WITH A MINIMUM ZINC COATING OF 2 OUNCES PER SQUARE FOOT. ALL BURRS AND SHARP EDGES SHALL BE REMOVED PRIOR TO GALVANIIZING.

FIELD WELDS SHALL BE GALVANIZED WITH "GALVALLOY" OR APPROVED EQUAL. PAINTING OF WELDS WILL NOT BE PERMITTED.

HORIZONTAL RAILS AND VERTICAL POSTS SHALL BE 2 INCH DIAMETER AND BALUSTERS SHALL BE 1" DIAMETER STANDARD WEIGHT GALVANIZED STEEL PIPE. RAILS, POSTS AND BALUSTERS SHALL BE MACHINE CUT TO PROVIDE A UNIFORM LENGTH PRIOR TO ASSEMBLY.

RAILING SHALL BE ERECTED AND ADJUSTED, IF NECESSARY, TO ASSURE A CONTINUOUS LINE AND GRADE. FINISHED HEIGHT IS TO BE PER UBC REQUIREMENTS ABOVE PEDESTRIAN SURFACE. EXPANSION JOINTS SHALL BE PROVIDED AT INTERVALS SHOWN ON THE STANDARD DRAWING.

## HANDRAILS AND GUARDRAILS (ALUMINUM)

ALUMINUM HANDRAIL AND GUARDRAIL SHALL BE FABRICATED AND INSTALLED IN ACCORDANCE WITH THESE SPECIAL PROVISIONS AND STANDARD DRAWING.

ALUMINUM HANDRAIL AND GUARDRAIL SHALL BE NATURAL ALUMINUM COLOR.

IF ANODIZATION IS SPECIFIED, ALL ALUMINUM PARTS SHALL BE GIVEN A CLEAR ANODIC COATING AT LEAST 0.0006 INCH THICK AND SHALL BE SEALED TO MEET THE REQUIREMENTS OF ASTM B 136 AND SHALL HAVE A UNIFORM FINISH.

WELDING OF ALUMINUM SHALL BE IN ACCORDANCE WITH THE "STRUCTURAL WELDING CODE ALUMINUM, AWS D 1.2".

ALL MATERIALS USED IN THE FABRICATION OF ALUMINUM HANDRAILS AND GUARDRAILS SHALL MEET THE REQUIREMENTS OF ASTM B241 OR B429 ALLOY 6061–T6 SCHEDULE 40(STD. PIPE).

HORIZONTAL RAILS AND VERTICAL SUPPORT POSTS SHALL BE 1.9" OD AND BALUSTERS SHALL BE 1.05" OD. STANDARD WEIGHT ALUMINUM PIPE. RAILS, POSTS AND BALUSTERS SHALL BE MACHINE CUT TO PROVIDE A UNIFORM LENGTH PRIOR TO ASSEMBLY.

APPROVED BY

12/28/16

MARYSVILLE CITY ENGINEER DATE

CITY OF Marysville WASHINGTON

# HANDRAIL AND GUARDRAIL NOTES

STANDARD PLAN 3–501–006a

LAST REVISED 12/28/01

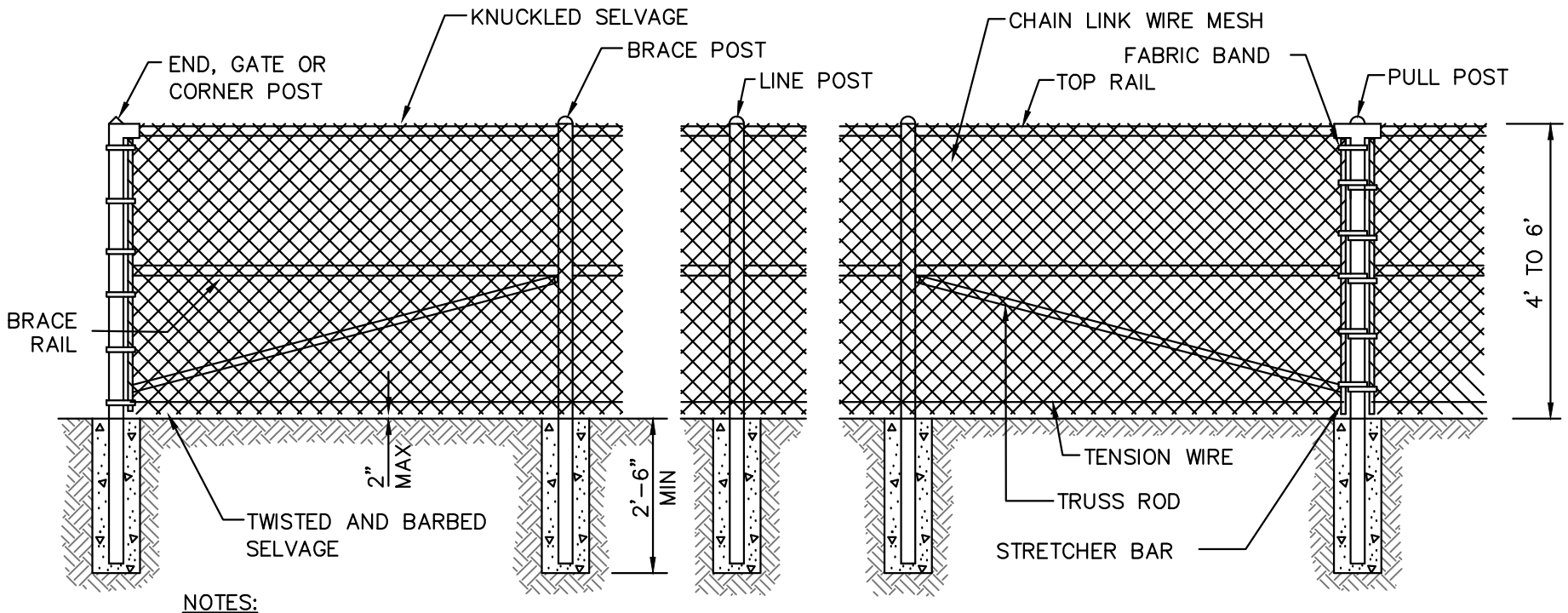


NOTES:

1. MATERIAL SHALL BE SCHEDULE 40
2. WIRE MESH SHALL BE 9 GAUGE WIRE
3. BARBED WIRE TO BE PLACED ON TOP AS DIRECTED
4. WOOD SLATS MAY BE REQUIRED
5. SCHEDULE 40 IS REQUIRED FOR ALL POSTS FOR FUTURE SLATES AND WIND SHEAR.
6. TENSION WIRE SHALL BE 7 GAUGE
7. ALL CHAIN LINK FENCE SHALL BE BLACK VINYL OR POWDER COATED.
8. FENCE SECTION SHALL BE 8' UNLESS OTHERWISE INSTRUCTED.

APPROVED BY 12/28/16

MARYSVILLE CITY ENGINEER DATE

# CHAIN LINK FENCE

CITY OF Marysville WASHINGTON

REVISED STANDARD PLAN 3-501-007

LAST REVISED 12/28/16

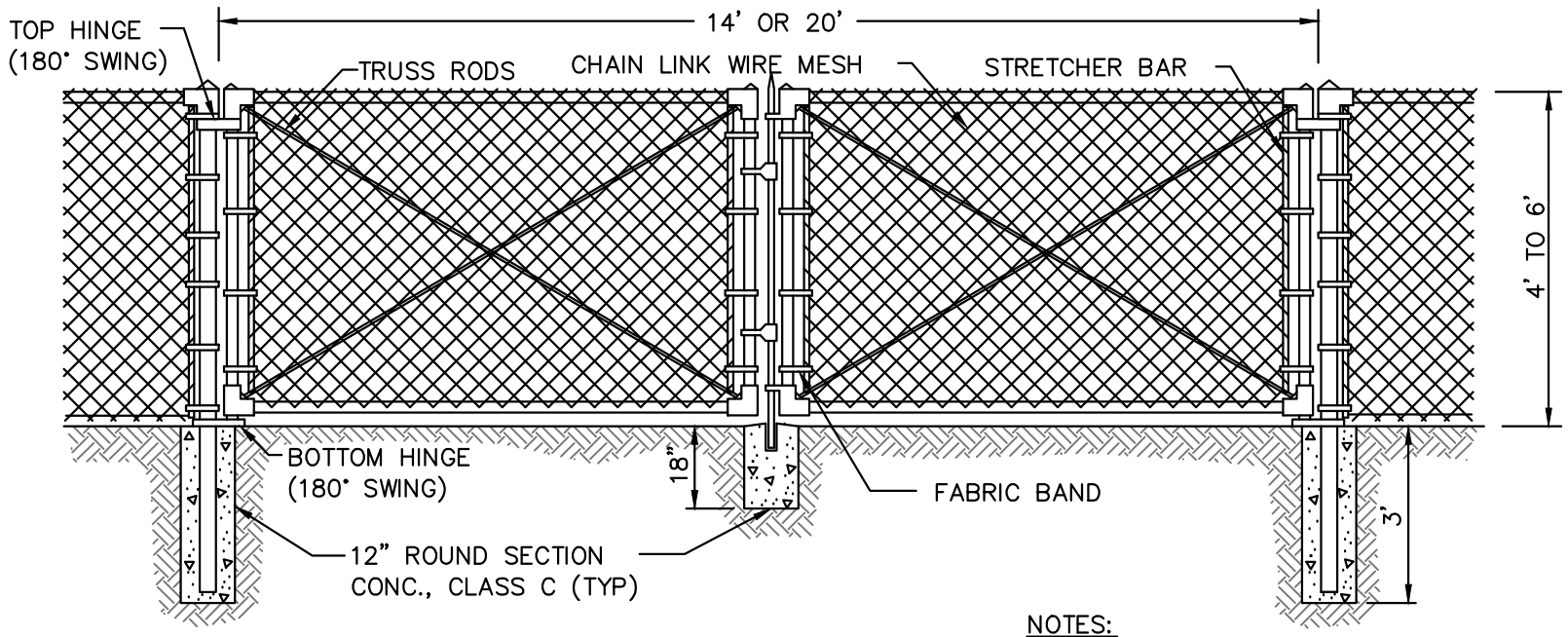


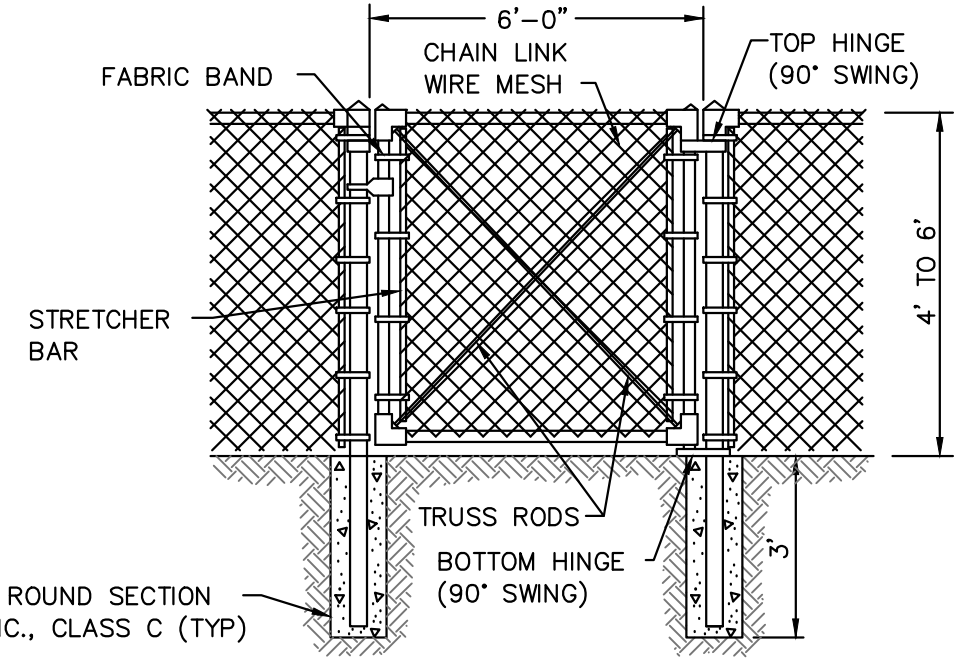


NOTES:

1. FENCE FABRIC SHALL BE SECURED TO GATE FRAMES WITH KNUCKLED SELVAGE ALONG TOP EDGE.
2. MINIMUM POST LENGTH: 8'-8"
3. PROVIDE LOCKING MECHANISM (PADLOCK BY CITY)
4. BARBED WIRE TO BE PLACED ON TOP AS DIRECTED.
5. ALL CHAIN LINK FENCE SHALL BE BLACK VINYL OR POWDER COATED.

APPROVED BY 12/28/16

MARYSVILLE CITY ENGINEER DATE

## CHAIN LINK GATES

CITY OF Marysville WASHINGTON

REVISED STANDARD PLAN 3-501-008

LAST REVISED 12/28/16

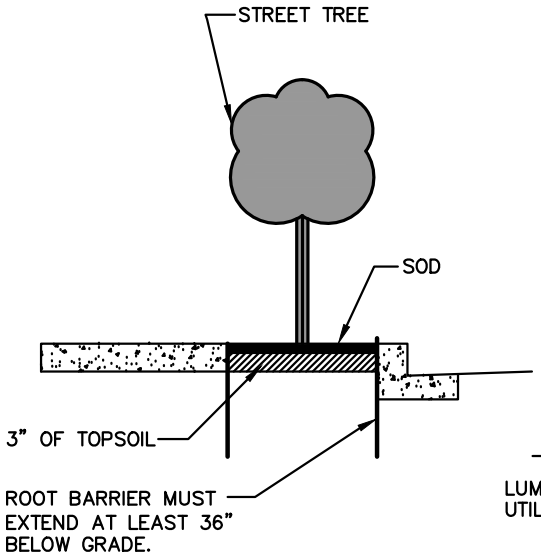


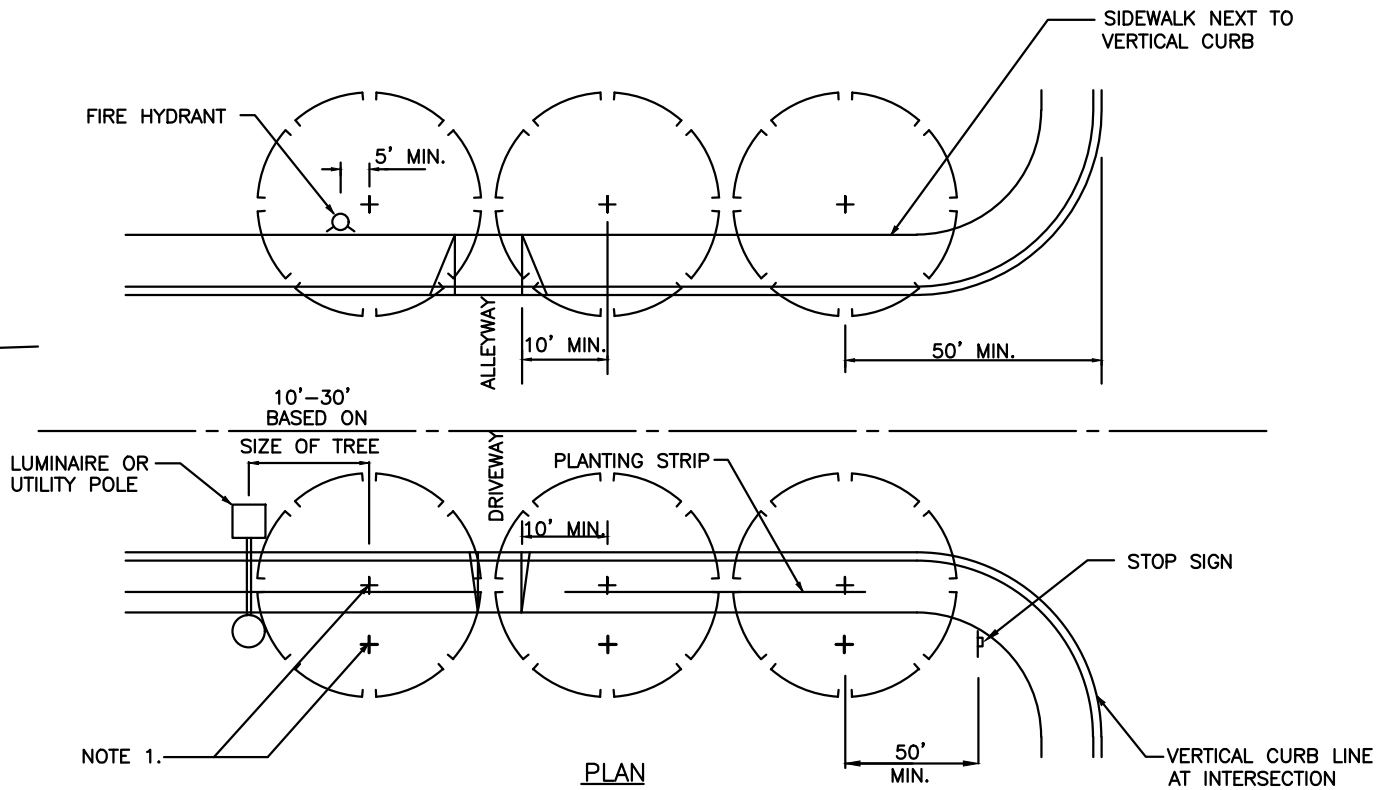


PLAN

NOTES:

1. TREES SHALL GENERALLY BE PLANTED BACK OF THE SIDEWALK. PLANTING STRIPS WILL BE APPROVED ONLY AS PART OF A LANDSCAPING PLAN IN WHICH PLANT MAINTENANCE, COMPATIBILITY WITH UTILITIES, AND TRAFFIC SAFETY ARE DULY CONSIDERED.

2. IF PLANTING STRIPS ARE APPROVED:

   A. MIN. DISTANCE FROM CENTER OF ANY TREE TO NEAREST EDGE OF VERTICAL CURB SHALL BE 2 FEET.

   B. TREES SHALL BE STAKED IN A MANNER NOT TO OBSTRUCT SIDEWALK TRAFFIC.

   C. IN CASE OF BLOCK–OUTS, MIN. CLEAR SIDEWALK WIDTH SHALL BE 5 FEET IN RESIDENTIAL OR 8 FEET IN BUSINESS DISTRICTS.

   D. ROOT BARRIERS SHALL BE PRECAST CONCRETE SECTIONS OR SIMILAR IMPERMEABLE DURABLE MATERIAL.

APPROVED BY 12/28/16

MARYSVILLE CITY ENGINEER DATE

CITY OF Marysville WASHINGTON

# STREET TREE STANDARDS

STANDARD PLAN 3–504–001

LAST REVISED 12/28/16

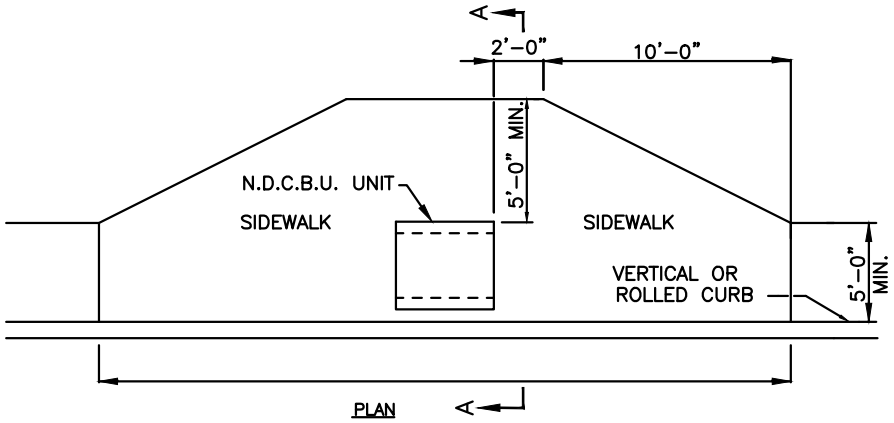


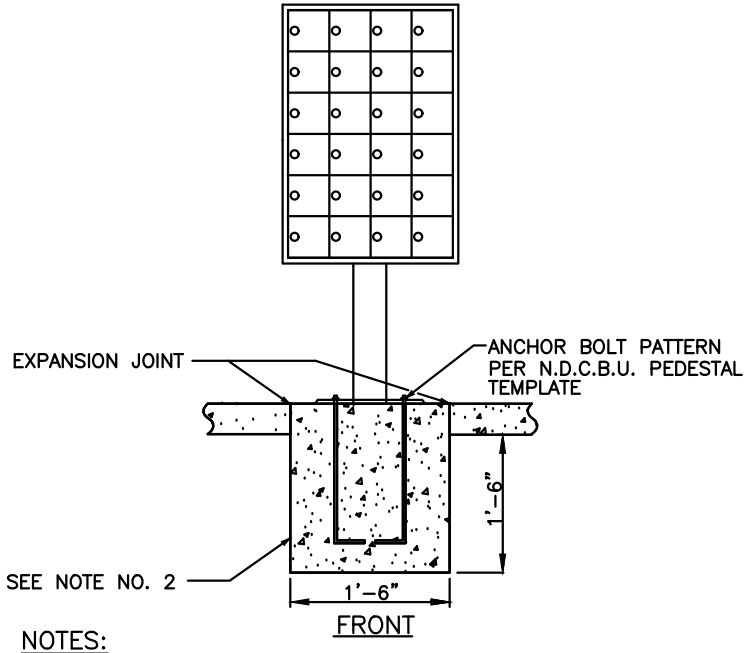


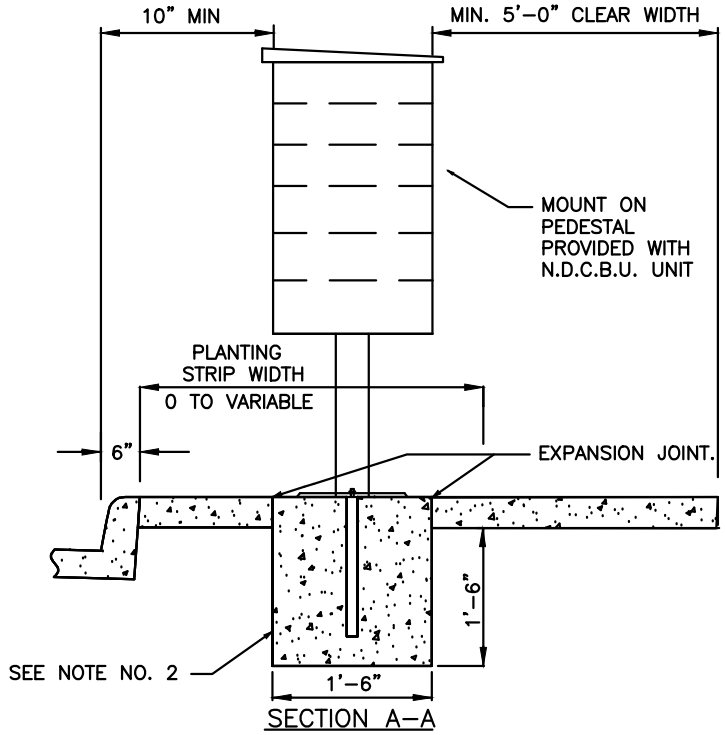


NOTES:

1. INSTALLATION OF N.D.C.B.U. (INCLUDING CONSTRUCTION OF BASE) WILL BE DONE BY CONTRACTOR.
2. SEE SEC. 3-505 FOR JOINT REQUIREMENTS.
3. CITY RIGHT-OF-WAY PERMIT REQUIRED.

APPROVED BY 12/28/16

MARYSVILLE CITY ENGINEER DATE

CITY OF Marysville WASHINGTON

**NEIGHBORHOOD DELIVERY & COLLECTION BOX UNIT INSTALLATION**

STANDARD PLAN 3-505-001

LAST REVISED 12/28/16

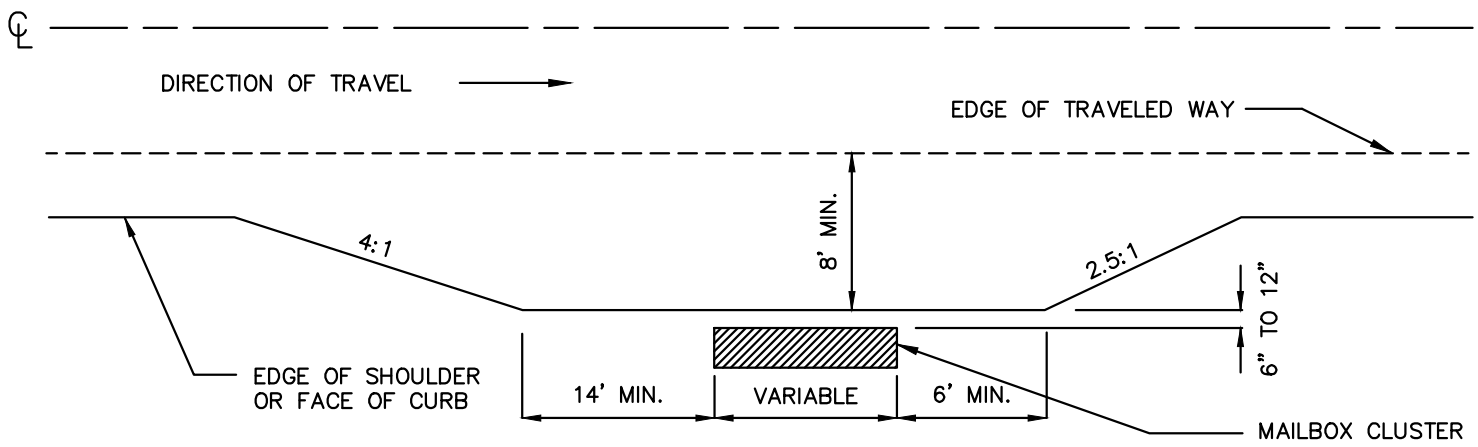


NOTES:

1. FOR ARTERIAL ROADS OR AS REQUIRED BY THE CITY ENGINEER.
2. SEE SECTION 3–505

APPROVED BY

12/28/16

MARYSVILLE CITY ENGINEER DATE

CITY OF Marysville WASHINGTON

# MAILBOX TURNOUT

STANDARD PLAN 3–505–002

LAST REVISED 12/28/16

NOTES:

1. CASTINGS SHALL BE GRAY IRON ASTM A48, AASHTO M 105, CLASS 30.
2. COVER AND SEAT SHALL BE MACHINED FOR PERFECT CONTACT AROUND CIRCUMFERENCE AND FULL WIDTH OF BEARING SURFACE.
3. APPROXIMATE WEIGHTS, STANDARD.

| | |
|---|---|
| CASE | 60 LBS |
| COVER | 19 LBS |
| TOTAL | 79 LBS |

4. PAVEMENT SHALL BE ASPHALT CONCRETE OR APPROVED SUBSTITUTE.
5. CONCRETE SHALL BE CLASS 4000.

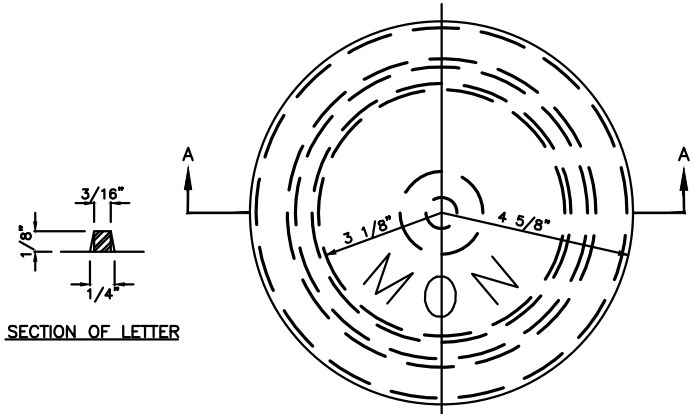


PLAN OF COVER




SECTION OF LETTER

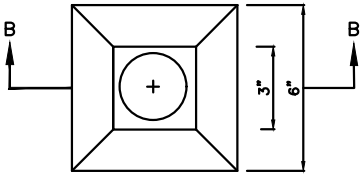


PLAN OF MONUMENT

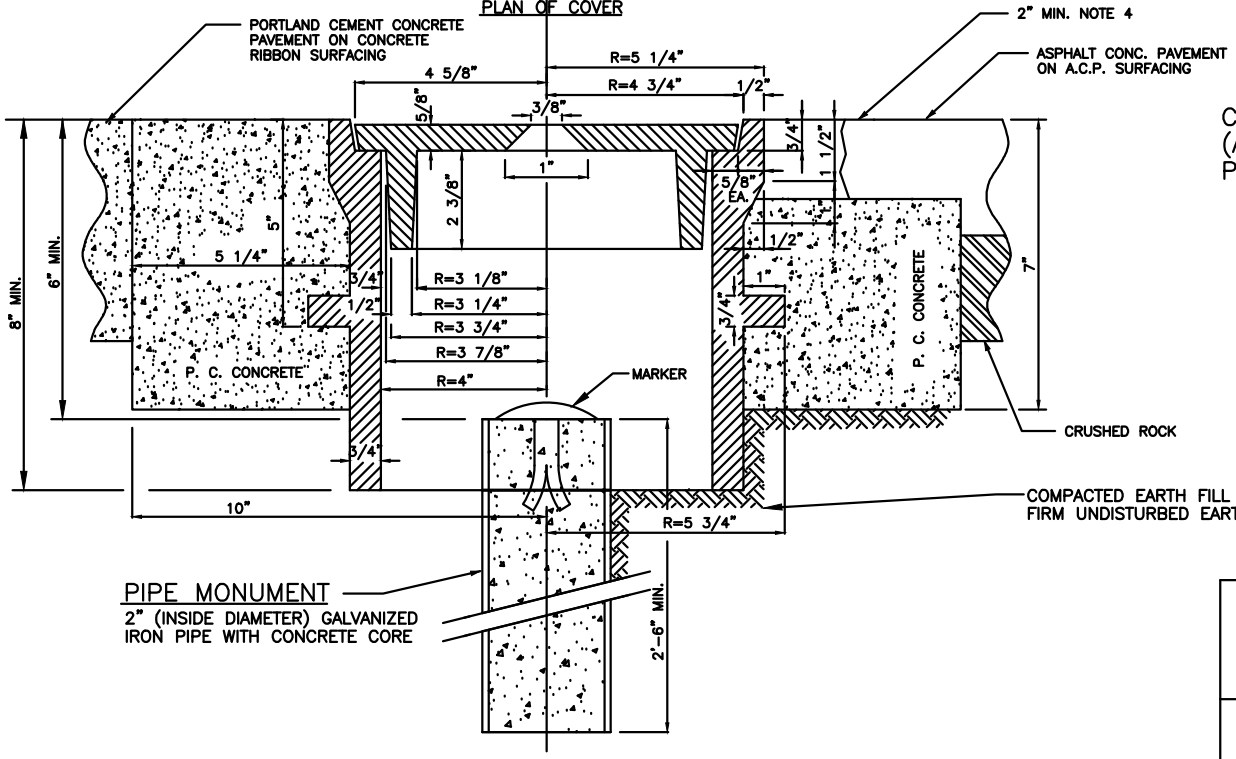


SECTION A–A

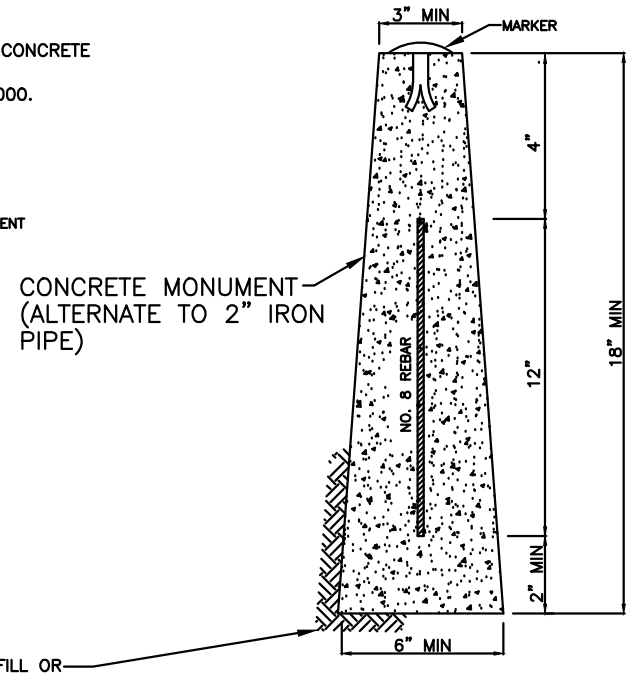


SECTION B–B

APPROVED BY

12/28/16

MARYSVILLE CITY ENGINEER DATE

# ROADWAY SURVEY MONUMENT W/CASE & COVER

CITY OF Marysville WASHINGTON

STANDARD PLAN 3–507–001

LAST REVISED 12/28/16

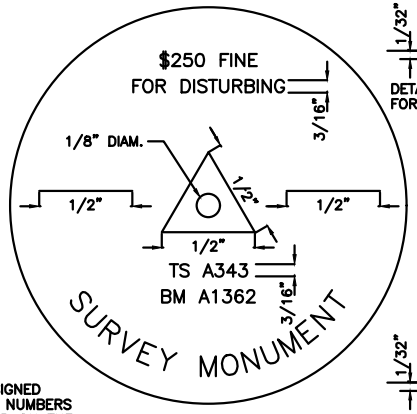


NOTE:

ONLY THE ASSIGNED IDENTIFICATION NUMBERS ARE TO APPEAR ON THE BRASS DISC.

PLAN

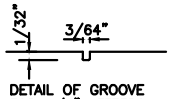


DETAIL OF GROOVE FOR 1/4" LETTERS

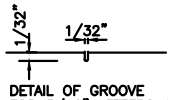


DETAIL OF GROOVE FOR 3/16" LETTERS AND LINES

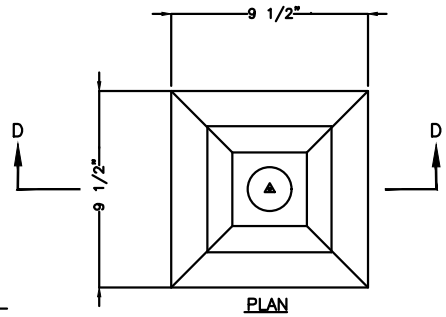


PLAN

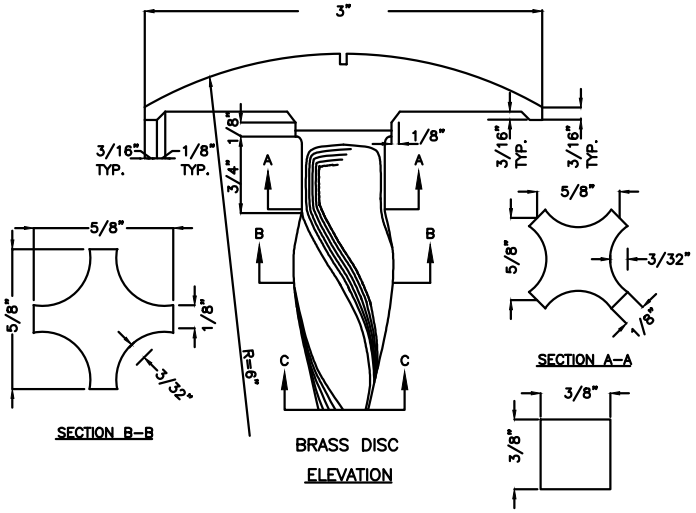


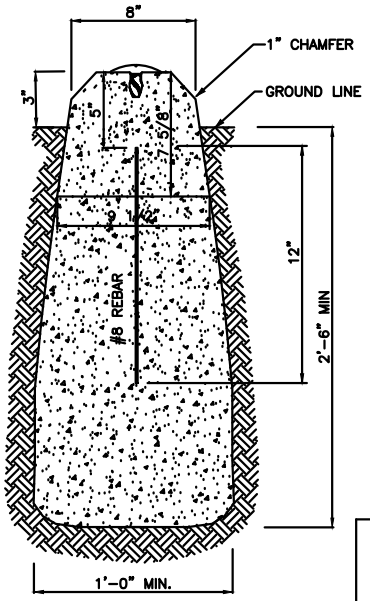


GENERAL INSTALLATION

SECTION D-D

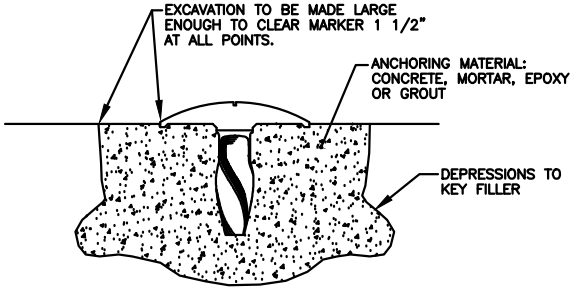


THE MARKER OR ADDITIVE TO THE ANCHORING MATERIAL IN THIS TYPE OF INSTALLATION TO BE CAPABLE OF DETECTION BY A FERROUS TYPE METAL DETECTOR.

LEDGE ROCK OR
CONCRETE INSTALLATION

NOTES:

1. THE MARKER SHALL BE CAST OF YELLOW BRASS SAE 41, BRONZE OR ALUMINUM.
2. CONCRETE SHALL BE CLASS 4000.
3. THE HOLE SHALL BE 18" MIN. IN DEPTH. ALL LOOSE MATERIAL SHALL BE REMOVED FROM THE BOTTOM OF THE HOLE SO THAT THE CONCRETE IS ON FIRM, UNDISTURBED EARTH.
4. THE TOP OF THE CONCRETE SHALL BE TROWLED SMOOTH AND THE BRASS DISC SET IN THE CENTER WITH ITS TOP EDGE FLUSH AND LEVEL.
5. USE JUDGEMENT ON DEPTH OF BURY. DO NOT MAKE A HAZARD FROM TRIPPING OVER OF FALLING ON. IF IN SHOULDER OF ROAD BURY BELOW LIKELYHOOD OF BEING GRADED OUT.

APPROVED BY 12/28/16

MARYSVILLE CITY ENGINEER DATE

# OFF – ROADWAY

CITY OF Marysville WASHINGTON

STANDARD PLAN 3-507-002

LAST REVISED 12/28/16

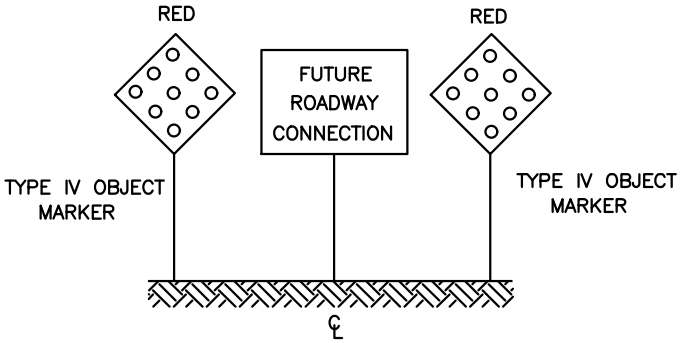


FIXED (PERMANENT)
END OF TEMPORARY CUL-DE-SAC

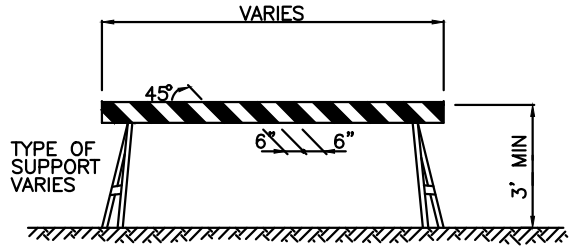


TYPE I BARRICADE

MOVABLE (TEMPORARY)
TYPE III BARRICADE

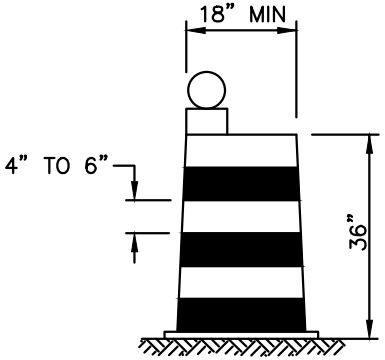


DRUM

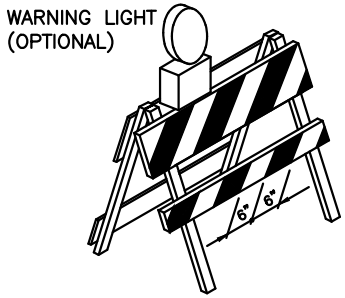


TYPE II BARRICADE

NOTE:
FOR DIMENSIONS NOT SHOWN, SEE TABLE.

| BARRICADE NOTES: | | | |
|---|---|---|---|
| TYPE | I | II | III |
| WIDTH OF RAIL | 8" MIN.<br>12" MAX. | 8" MIN.<br>12" MAX. | 8" MIN.<br>12" MAX. |
| LENGTH OF RAIL | 2' MIN. | 2' MIN. | 4' MIN. |
| HEIGHT | 3' MIN. | 3' MIN. | 5' MIN. |
| TYPE OF FRAME | DEMOUNTABLE OR HEAVY "A" | LIGHT "A" FRAME | POST OR SKIDS |
| FLEXIBILITY | ESSENTIALLY MOVABLE | PORTABLE | ESSENTIALLY PERMANENT |

STRIPE NOTES:

ORANGE & WHITE IF TEMPORARY.
RED & WHITE IF 3 MONTHS OR GREATER. REFLECTORIZED
SLANT DOWNWARD, RIGHT OR LEFT, IN DIRECTION TRAFFIC WILL PASS.
SLANT BOTH DIRECTIONS FROM MIDDLE IF TRAFFIC PASSES BOTH ENDS.
WIDTH 6" EXCEPT 4" IF RAILS ARE LESS THAN 3' LONG.
SLANT DOWNWARD TO MIDDLE AT END OF CLOSED ROAD.

SEE SEC. 3-5.07 AND MUTCD SEC.6C-8.

APPROVED BY 12/28/16
MARYSVILLE CITY ENGINEER DATE

# BARRICADES

CITY OF Marysville WASHINGTON

STANDARD PLAN 3-508-001

LAST REVISED 12/28/16

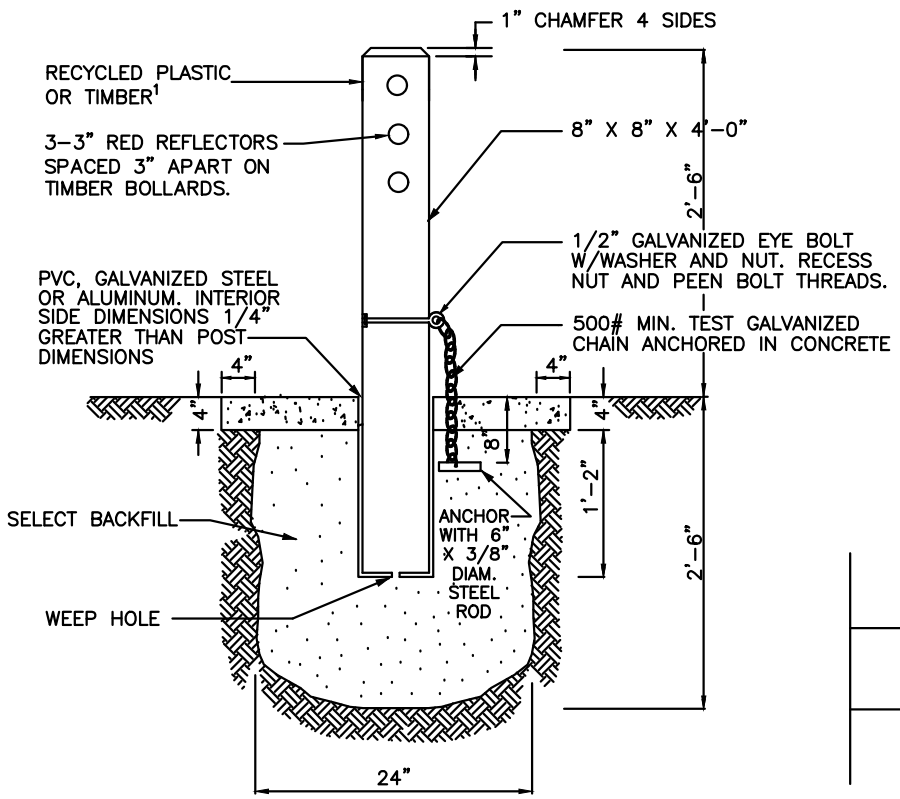


REMOVABLE BOLLARD

SECTION A-A

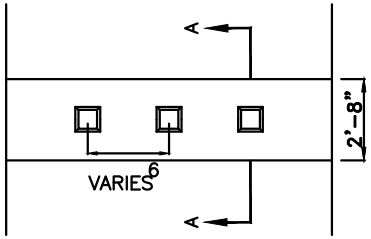


REMOVABLE BOLLARD

PLAN

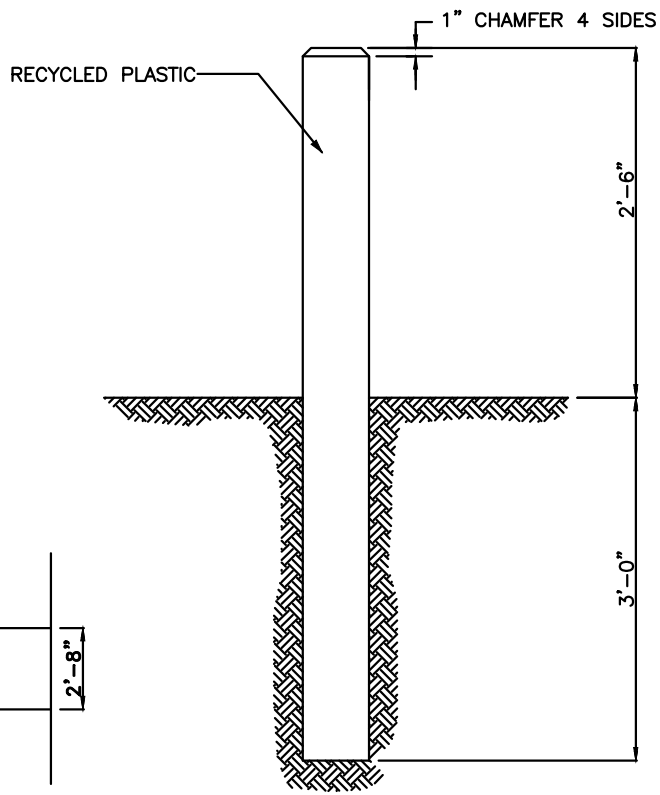


FIXED BOLLARD

NOTES:

1. RECYCLED PLASTIC BOLLARD SHALL BE WHITE. TIMBER SHALL BE DOUGLAS FIR, DENSE CONSTRUCTION GRADE, AND SHALL BE PRESSURE TREATED WITH A WATERBORNE PRESERVATIVE (ACA, CCA, ACZA) IN ACCORDANCE WITH THE REQUIREMENTS OF SEC. 9-09.3 (4) OF THE WSDOT/APWA STANDARD SPECIFICATIONS. TOP 5" OF TIMBER SHALL BE PAINTED WHITE.
2. STEEL TUBE SHALL CONFORM TO ASTM A53 GRADE A.
3. NUTS, BOLTS, & WASHERS SHALL CONFORM TO ASTM A307.
4. ALL STEEL PARTS SHALL BE GALVANIZED.
5. MIN. 50" SPACING ON TRAILS LESS THAN 10' WIDE. 60" SPACING ON TRAILS 10' OR WIDER.

APPROVED BY 12/28/16

MARYSVILLE CITY ENGINEER DATE

# BOLLARDS

CITY OF Marysville WASHINGTON

STANDARD PLAN 3-509-001

LAST REVISED 12/28/16

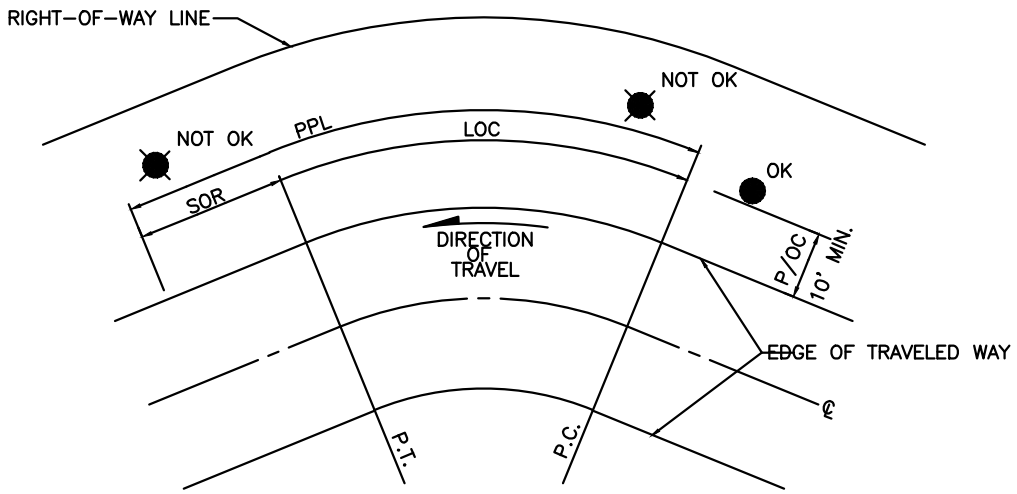


OUTSIDE OF CURVE
POSTED 40 MPH & OVER

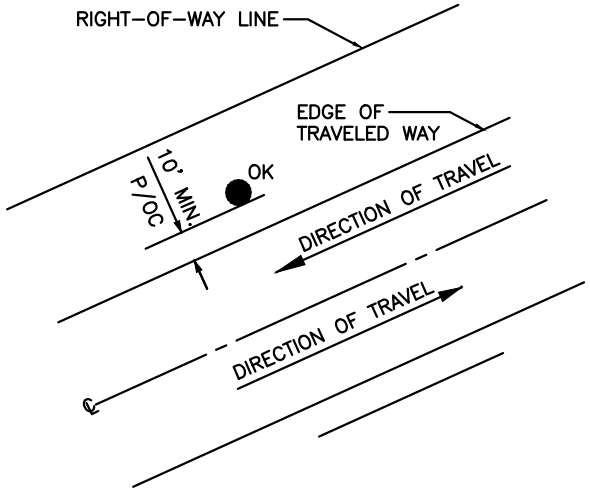


GENERAL CASE

P/OC: POLE/OBSTACLE CLEARANCE TO NEAREST FACE OF POLE/OBSTACLE.

LOC: LENGTH OF CURVE (FEET) AT EDGE OF TRAVELED WAY FROM P.C. TO P.T.

SOR: SAFETY OVERRUN (FEET) BEYOND P.T.

PPL: PROHIBITED POLE LOCATION (FEET) (LOC + SOR) WHERE POLES OR OBSTACLES MUST BE REMOVED OR BARRICADED.

| PPL (FEET) ON OUTSIDE OF CURVES WITH POSTED SPEED LIMIT OF 40 MPH & OVER. | |
|---|---|
| 40 MPH | LOC + 220 (SOR) |
| 45 | LOC + 255 |
| 50 | LOC + 290 |
| 55 | LOC + 325 |

APPLIES TO ROADWAY WITH SHOULDER OR MOUNTABLE CURB ON OUTSIDE OF CURVE, WITH:

–RADIUS LESS THAN 3500', AND

–POSTED SPEED GREATER THAN OR EQUAL TO 40 M.P.H.

NOTES:

1. THE STANDARDS SHALL APPLY TO EVERY NEW PLACEMENT AND EVERY PLANNED, NON-EMERGENCY REPLACEMENT OF EXISTING POLES AND OTHER UTILITY STRUCTURES WITHIN THE RIGHT-OF-WAY.
2. NO POLES MAY BE REPLACED ON THE OUTSIDE OF A CURVE WITH A POSTED SPEED LIMIT OF 40 MPH OR OVER UNLESS APPROVED THROUGH A VARIANCE REQUEST.
3. FOR SPEEDS 35MPH OR LESS, CLEAR ZONE SHALL BE THE GREATER OF:
   i) TWO FEET BEHIND FACE OF CURB
   ii) SIX FEET FROM EDGE OF TRAVELED WAY.

APPLIES: TO ROADWAY WITH SHOULDER OR MOUNTABLE CURB ON:

1. TANGENT, OR
2. INSIDE OF CURVE, OR
3. OUTSIDE OF CURVE, EITHER WITH
   –POSTED SPEED LESS THAN 40 MPH OR
   –RADIUS GREATER THAN 3500' ON ROADWAY MEETING ALL CURRENT DESIGN STANDARDS.

APPROVED BY 12/28/16

MARYSVILLE CITY ENGINEER DATE

CITY OF Marysville WASHINGTON

**CLEARANCE OF ROADSIDE OBSTACLES ON SHOULDER TYPE ROAD**

STANDARD PLAN 3-512-001

LAST REVISED 12/28/16

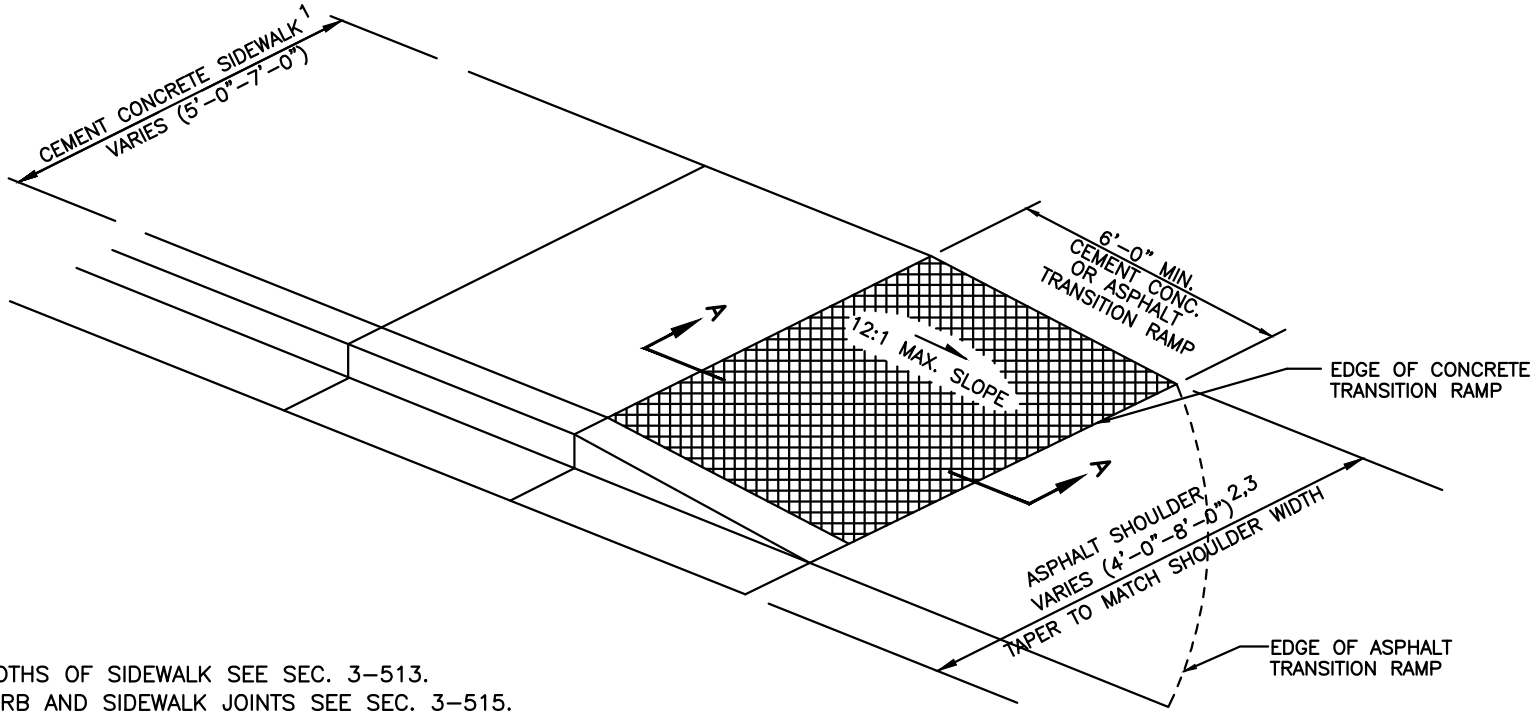


NOTES:

1. FOR WIDTHS OF SIDEWALK SEE SEC. 3-513.
2. FOR CURB AND SIDEWALK JOINTS SEE SEC. 3-515.
3. TRANSITION RAMP SHALL BE TEXTURED BY IMPRINT OF METAL GRID WITH 1/2" SPACING.

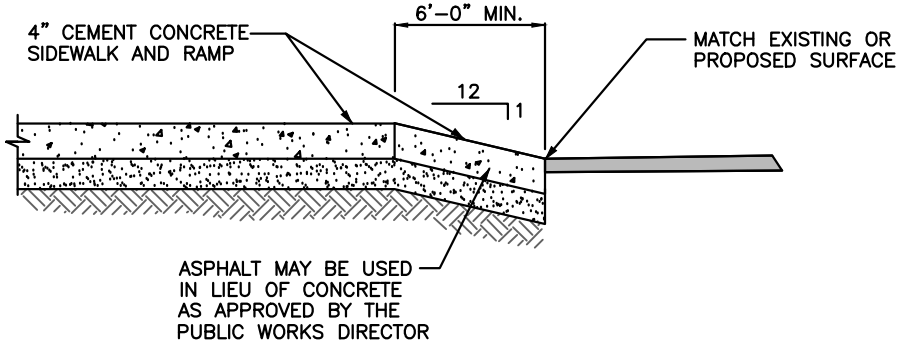


SECTION A-A

APPROVED BY 12/28/16

MARYSVILLE CITY ENGINEER DATE

CITY OF Marysville WASHINGTON

**CEMENT CONCRETE SIDEWALK TRANSITION TO ASPHALT SHOULDER**

STANDARD PLAN 3-513-001

LAST REVISED 12/28/16

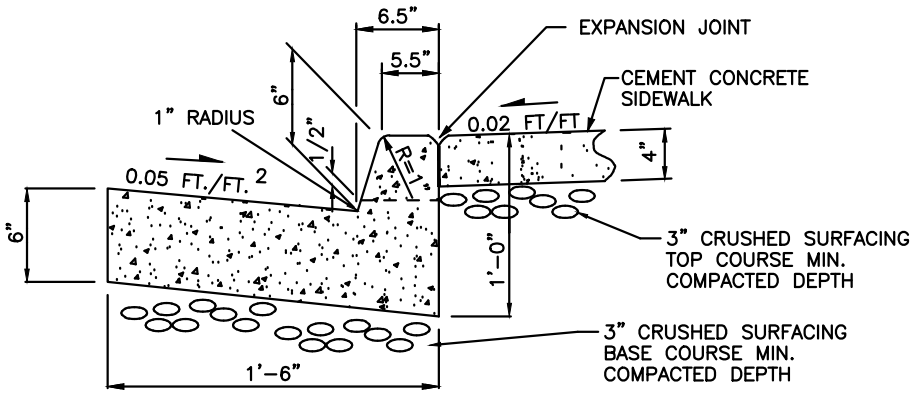


* NOTE: TOP OF LIP AT DRIVEWAYS.

CEMENT CONCRETE CURB & GUTTER

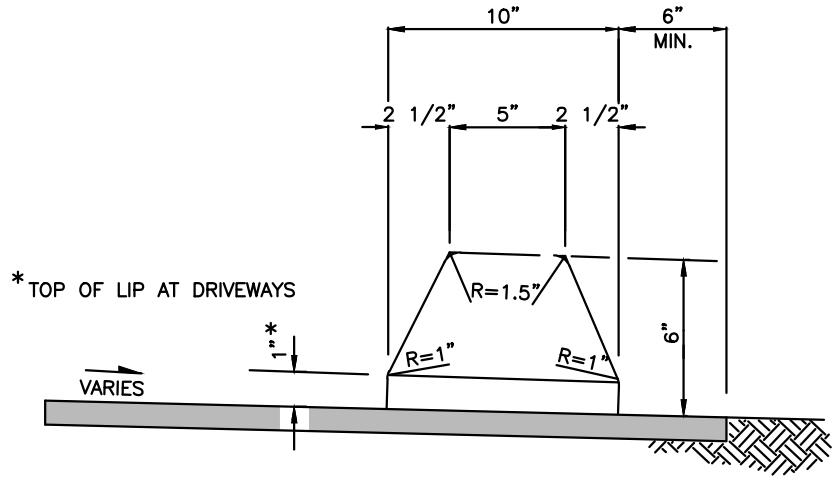


EXTRUDED ASPHALT OR CEMENT CONCRETE CURB [3]

NOTES:

1. SEE SEC. 3-515 FOR JOINT REQUIREMENTS.
2. ROLL GUTTER TO MATCH POSITIVE SUPERELEVATION.
3. SEE SEC. 3-514 FOR EXTRUDED CURB ANCHORAGE.
4. VERTICAL CURB WILL BE REQUIRED EXCEPT AS NOTED IN SECTION 3-514

APPROVED BY 12/28/16

MARYSVILLE CITY ENGINEER DATE

CITY OF Marysville WASHINGTON

# CURB DETAILS

STANDARD PLAN 3-514-001

LAST REVISED 12/28/16

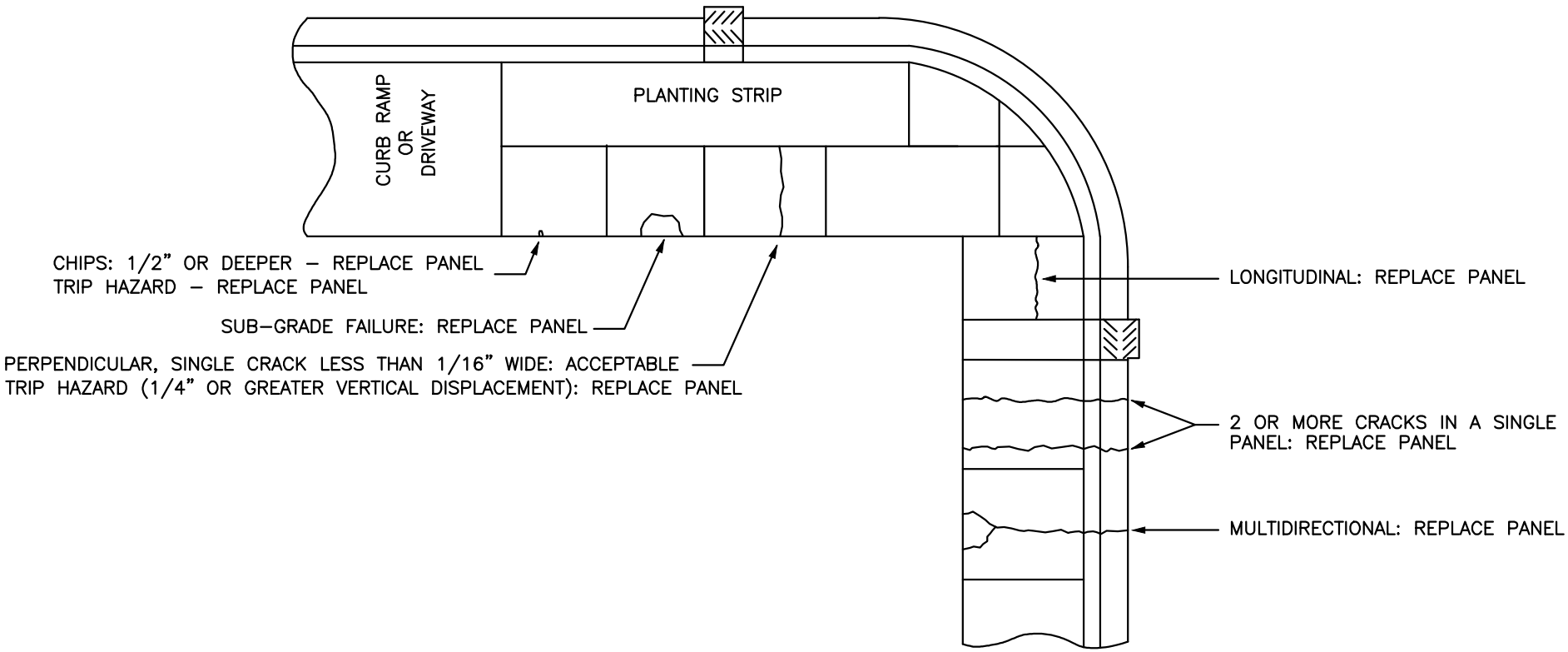


NOTES:

1. PANEL EDGES ARE DEFINED BY EXPANSION JOINTS OR DUMMY JOINTS.
2. PANEL REPLACEMENT AT DUMMY JOINTS SHALL BE SAWCUT.
3. "PANEL" REFERS TO DRIVEWAY RAMPS, CURB & GUTTER, AND SIDEWALK.

APPROVED BY 12/28/16

MARYSVILLE CITY ENGINEER DATE

# SIDEWALK REPLACEMENT REQUIREMENTS

CITY OF Marysville WASHINGTON

STANDARD PLAN 3–514–002

LAST REVISED 12/28/16

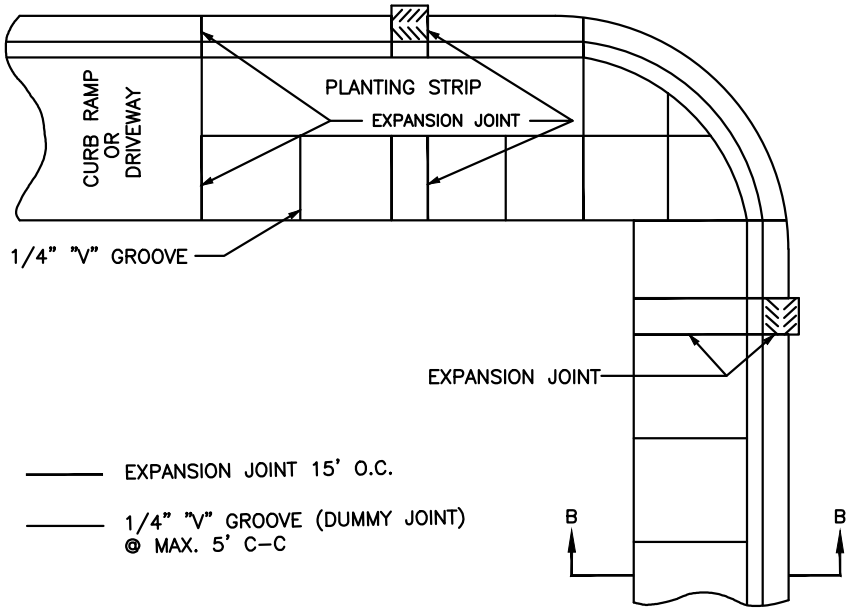


VERTICAL CURB & SIDEWALK

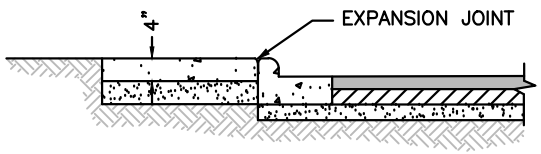


SECTION B-B

NOTES:

1. SEE SEC. 3-515 FOR JOINT REQUIREMENTS.
2. EXPANSION JOINTS IN SIDEWALK AND CURB TO BE ALIGNED WITH EACH OTHER.
3. EXPANSION JOINT SHALL BE 3/8"x2 1/2" MINIMUM.

APPROVED BY 12/28/16

MARYSVILLE CITY ENGINEER DATE

CITY OF Marysville WASHINGTON

# CURB & SIDEWALK JOINTS

STANDARD PLAN 3-515-001

LAST REVISED 12/28/16

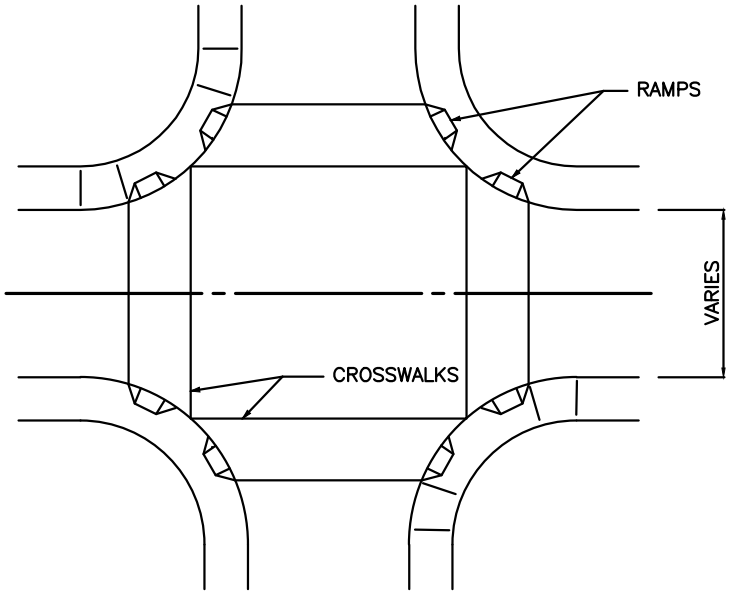


RAMP LOCATIONS
ON ARTERIALS AND COMMERCIAL ACCESS STREETS

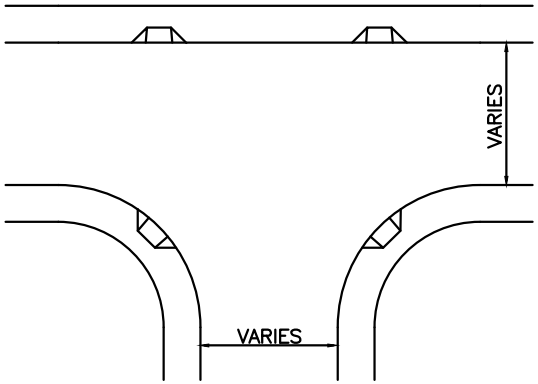


RAMP LOCATIONS
ON RESIDENTIAL ACCESS STREETS

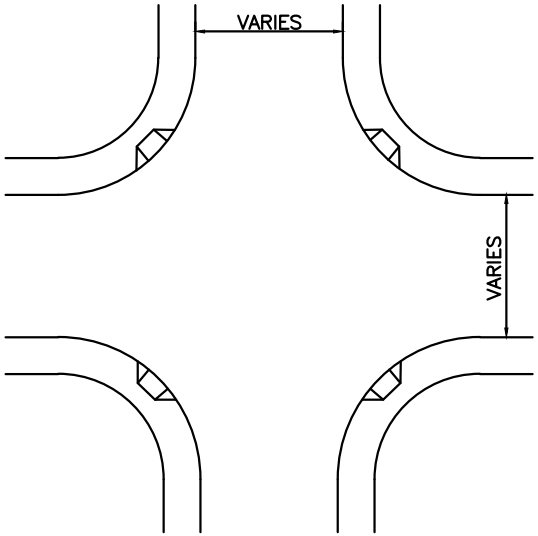


NOTES:

1. CATCH BASIN AND INLETS SHALL BE OUTSIDE THE CURB RAMP (24" MIN. CLEARANCE FROM RAMP).
2. CARE SHALL BE TAKEN TO KEEP THE RAMP FROM CONFLICTING WITH HYDRANTS, POLES, INLETS, AND OTHER UTILITIES.
3. CONSTRUCT RAMP IN ACCORDANCE WITH STANDARD WSDOT/APWA DETAILS.
4. CROSSWALKS ARE NOT ALWAYS MARKED.
5. WHEN RAMPS ARE CONSTRUCTED ON ONE SIDE OF STREET, RAMPS SHALL BE CONSTRUCTED AT CORRESPONDING LOCATIONS ON OPPOSITE SIDE OF STREET.
6. ALL CURB RAMPS SHALL MEET THE WSDOT STANDARD PLANS AND AMERICAN WITH DISABILITY ACT.

APPROVED BY 12/28/16

MARYSVILLE CITY ENGINEER DATE

CITY OF Marysville WASHINGTON

# CURB RAMP LOCATIONS

STANDARD PLAN 3-516-001

LAST REVISED 12/28/16

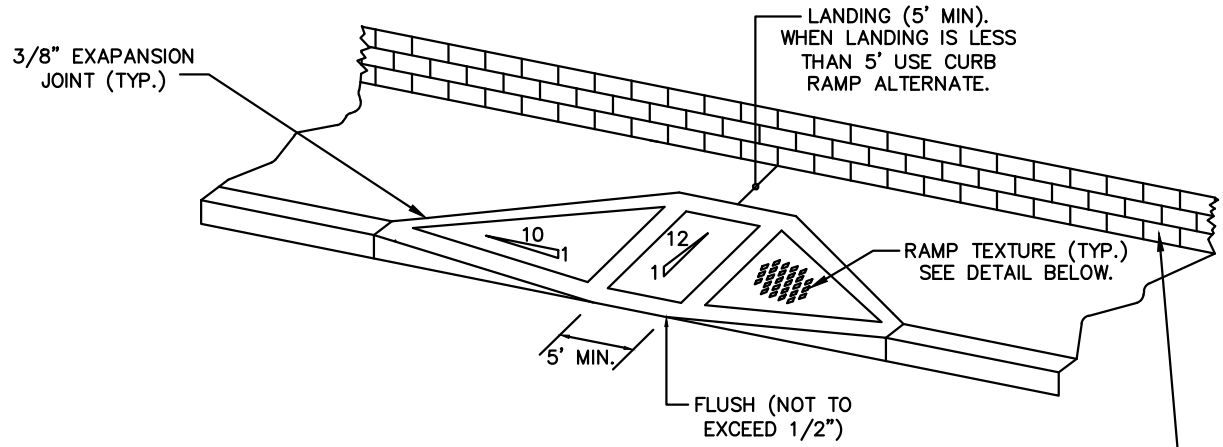


CURB RAMP

NOTE: AREA MAY BE GRADED TO MATCH EXISTING GRADE.

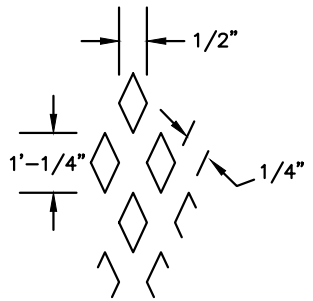


RAMP TEXTURE DETAIL

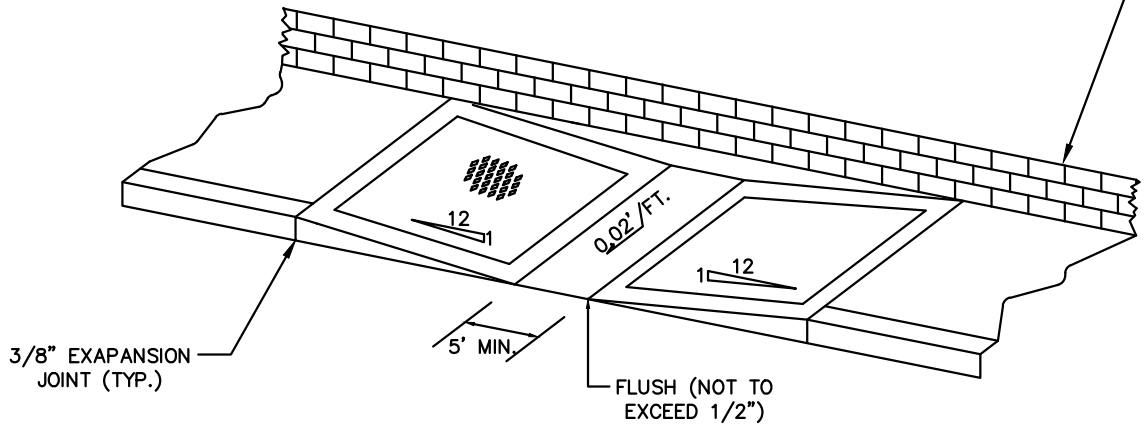


CURB RAMP ALTERNATE

APPROVED BY 12/28/16

MARYSVILLE CITY ENGINEER DATE

CITY OF Marysville WASHINGTON

# SIDEWALK AND CURB RAMP DESIGN

STANDARD PLAN 3-516-002

LAST REVISED 12/28/16

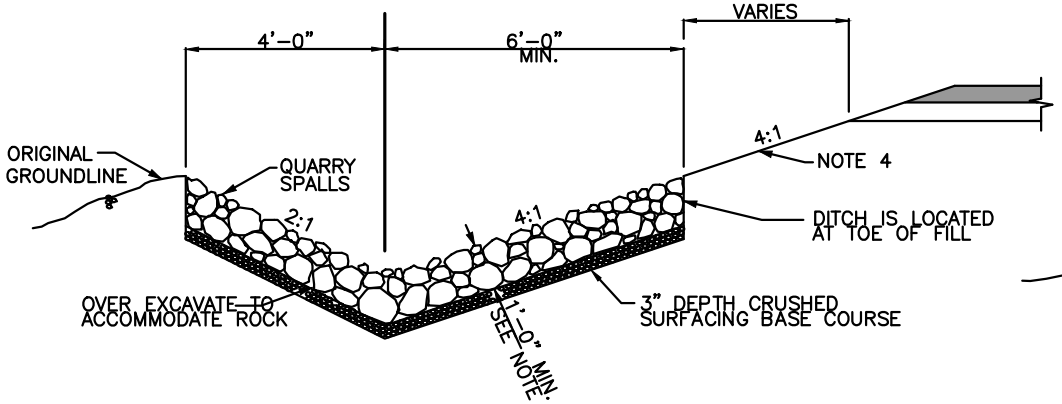


ROCK-LINED SHOULDER DITCH
IN FILL SECTION

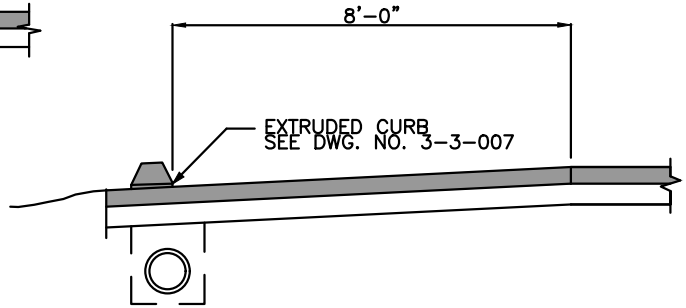


CURBED SHOULDER

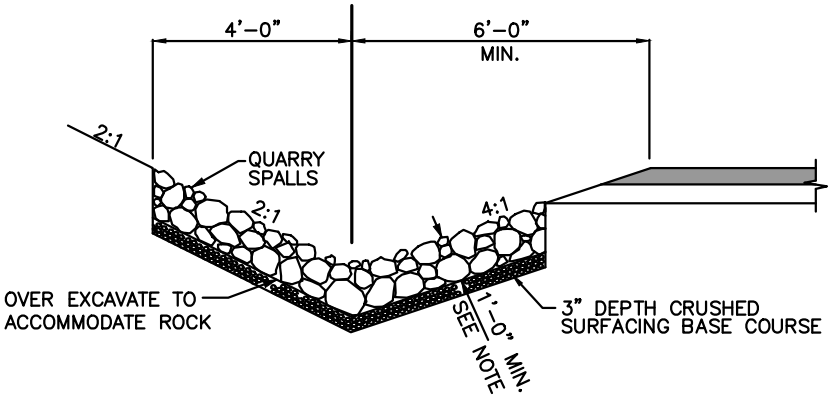


ROCK-LINED SHOULDER DITCH
IN CUT SECTION

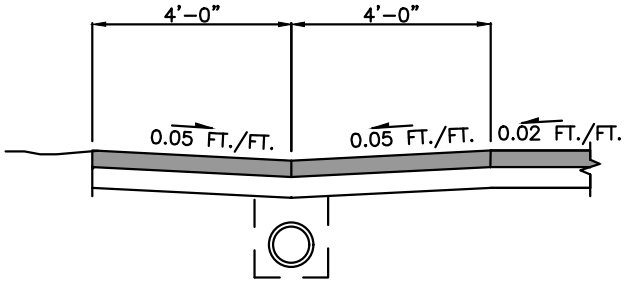


TURNPIKE SHOULDER

NOTES FOR ROCK LINED DITCHES:

1. DEEPER ROCK FILL MAY BE SPECIFIED.
2. USE FOR FINISH ROAD GRADES – 0.5% TO 15%
3. FOR SLOPES GREATER THAN 7% PROTECT SLOPE WITH ROCK
   FOR SLOPES LESS THAN 7% PLACE CRUSHED ROCK OR HYDROSEED.

APPROVED BY 12/28/16

MARYSVILLE CITY ENGINEER DATE

CITY OF Marysville WASHINGTON

**ROCK LINED SHOULDER DITCHES & CURBED OR TURNPIKE SHOULDERS**

STANDARD PLAN 3-518-001

LAST REVISED 12/28/16

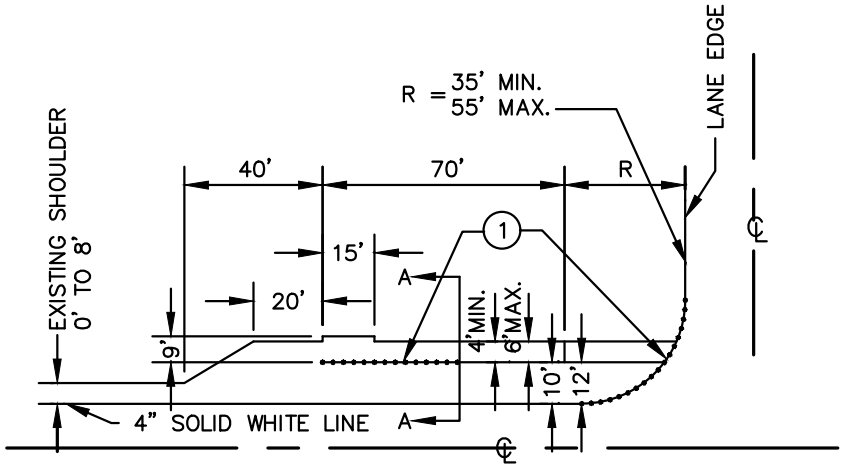


STD. FARSIDE BUS PULLOUT (2)
(SHOULDER SECTION)

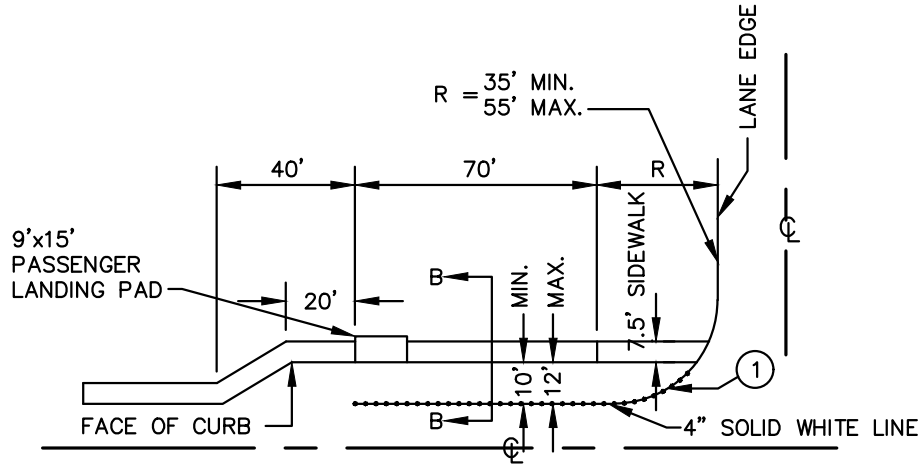


STD. FARSIDE BUS PULLOUT (2)
(CURB SECTION)

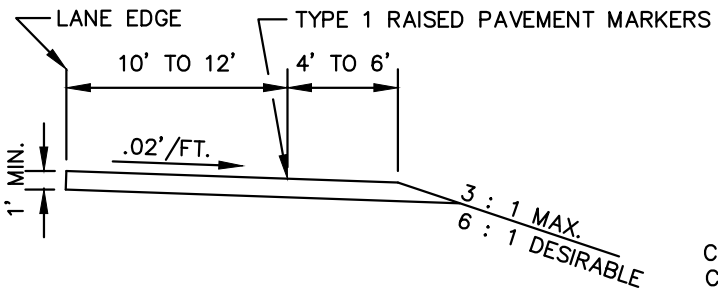


SECTION A – A

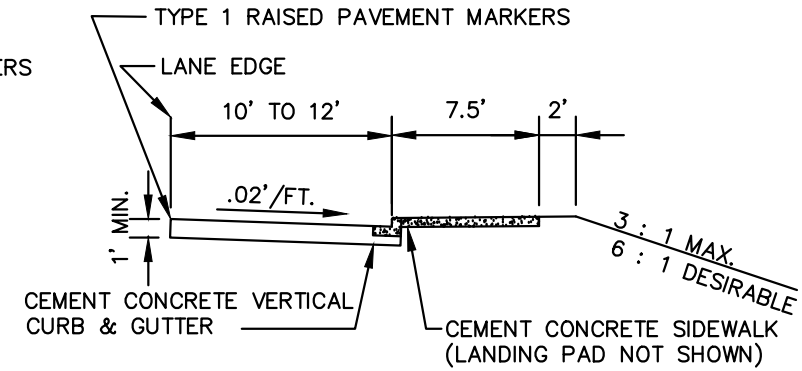


SECTION B – B

APPROVED BY 12/28/16

MARYSVILLE CITY ENGINEER DATE

NOTES:

1. TYPE 1 RAISED PAVEMENT MARKERS, 3' O.C. SEE WSDOT/APWA SPECIFICATIONS.
2. FARSIDE BUS PULLOUTS ARE PREFERRED. FOR DESIGN GUIDANCE RELATIVE TO NEARSIDE AND MIDDLE BLOCK BUS PULLOUTS, SEE THE WSDOT DESIGN MANUAL, CHAPTER 1060.

# BUS PULLOUTS

CITY OF Marysville WASHINGTON

STANDARD PLAN 3-520-001

LAST REVISED 12/28/16

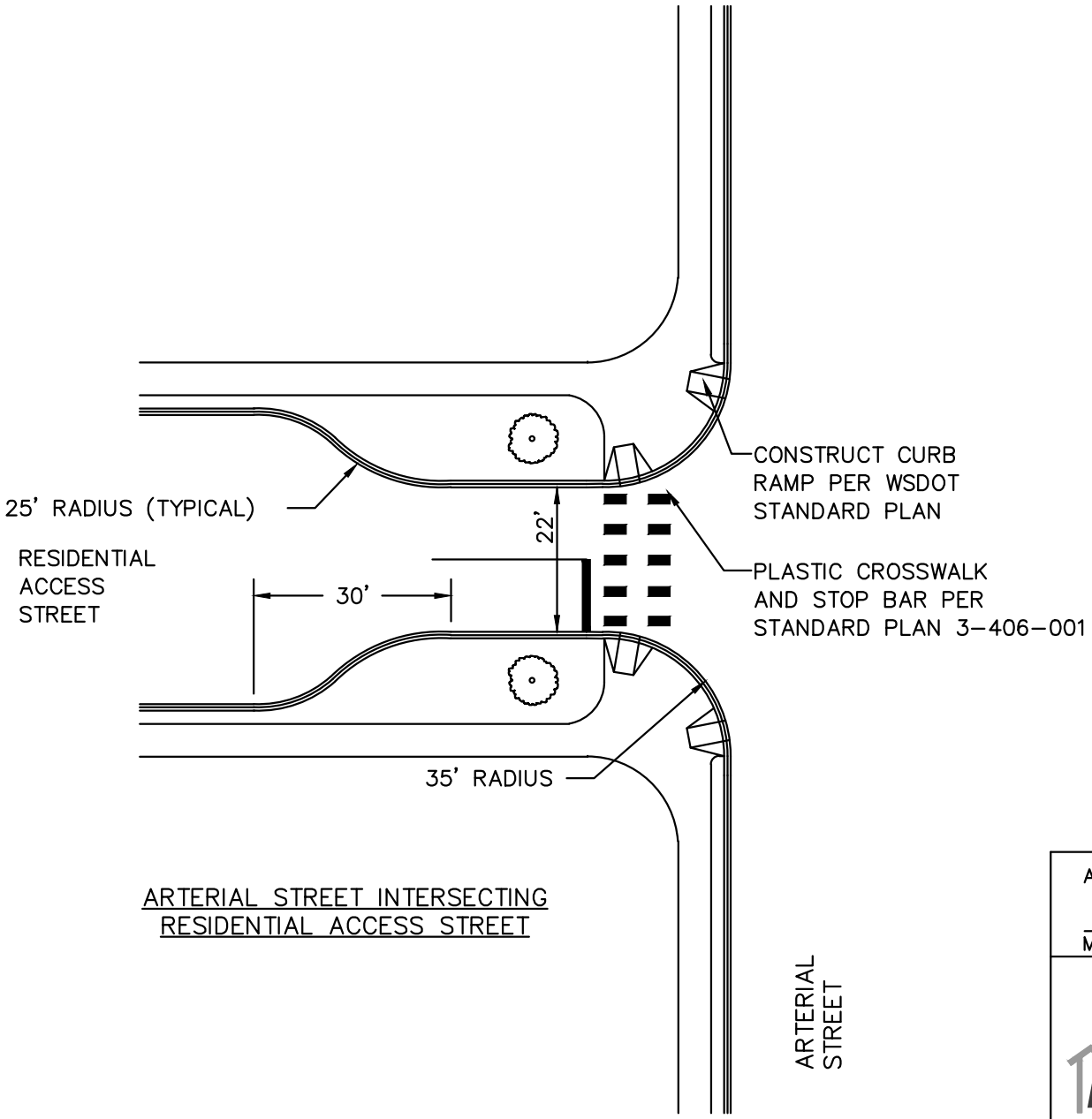


ARTERIAL STREET INTERSECTING
RESIDENTIAL ACCESS STREET

NOTE:

1. CURB RAMP LOCATION PER STANDARD PLAN 3-516-001.
2. CROSSWALK(S) SHALL NOT ALWAYS BE MARKED. ENGINEER APPROVAL SHALL BE GIVEN BEFORE INSTALLATION.

APPROVED BY 12/28/16

MARYSVILLE CITY ENGINEER DATE

**NECKDOWNS ARTERIAL/RESIDENTIAL ACCESS STREET INTERSECTION**

CITY OF Marysville WASHINGTON

STANDARD PLAN 3-525-001

LAST REVISED 12/28/16

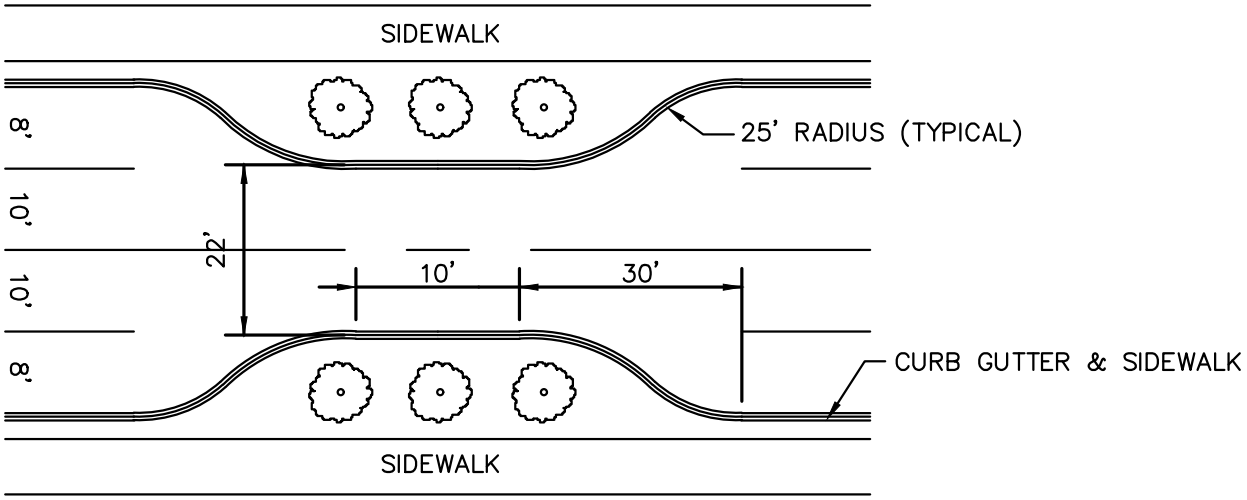


NOTES:

1. CHOKERS SHALL BE USED ONLY ON NEIGHBORHOOD COLLECTOR STREETS. SEE STANDARD PLAN 3-202-001.

2. CHOKERS SHALL BE SPACED A MAXIMUM OF 400' CENTER TO CENTER.

APPROVED BY 12/28/16

MARYSVILLE CITY ENGINEER DATE

# CHOKERS

CITY OF Marysville WASHINGTON

STANDARD PLAN 3-525-003

12/28/16

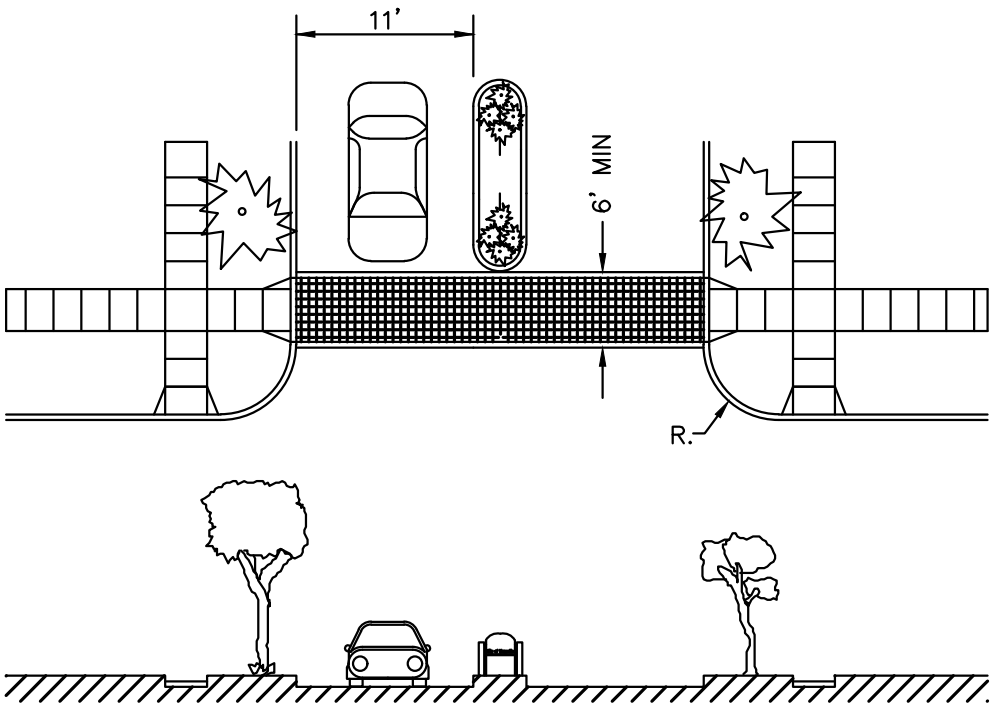


NOTES

1. FOR RADIUS RETURN SEE SECTION 3–209.
2. CURB RAMPS PER STANDARD PLAN 3–516–001.
3. PEDESTRIAN TREATMENT SHALL BE RED BRICK, PAVERS, OR STAMPED PORTLAND CEMENT CONCRETE.
4. ISLAND SHALL BE CONSTRUCTED USING CEMENT CONCRETE CURB AND GUTTER. SEE STANDARD PLAN 3–514–001.
5. LANDSCAPING SHALL BE APPROVED BY THE CITY.

APPROVED BY 12/28/16

MARYSVILLE CITY ENGINEER DATE

# GATEWAYS

CITY OF Marysville WASHINGTON

STANDARD PLAN 3–525–004

LAST REVISED 12/28/16

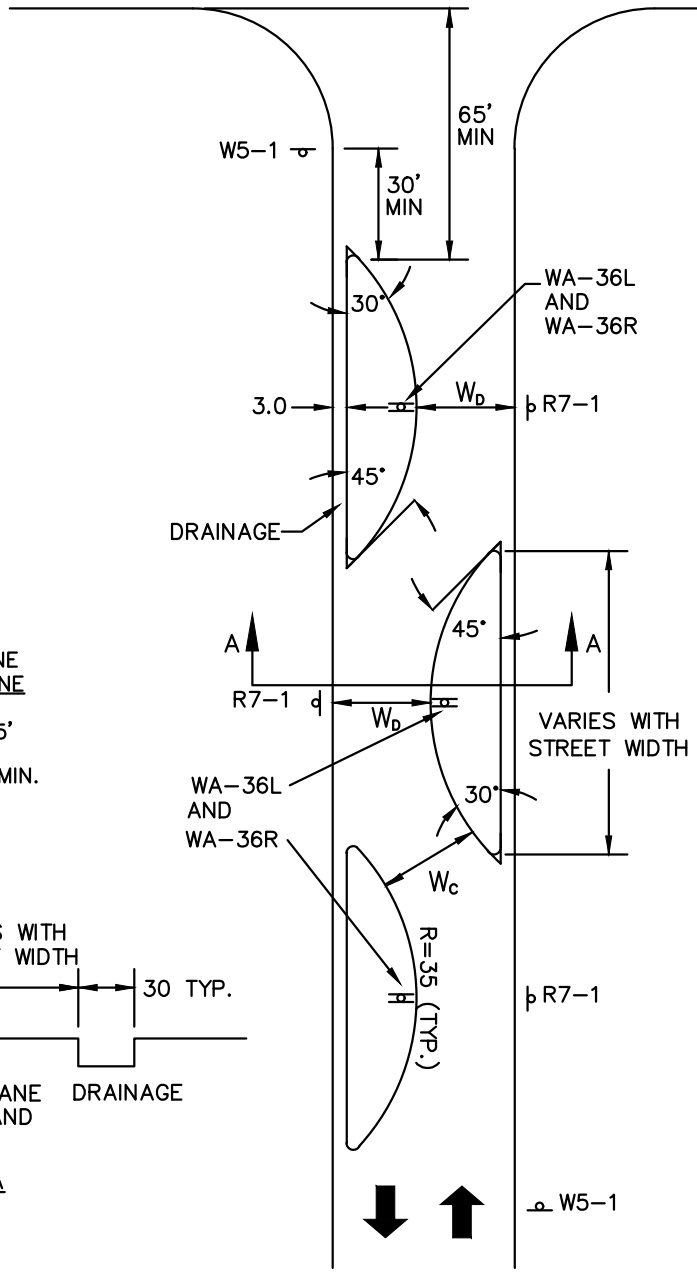


| | TWO LANES | ONE LANE |
|---|---|---|
| $W_D$ | 23' | 15' |
| $W_C$ | 20' MIN. | 11' MIN. |

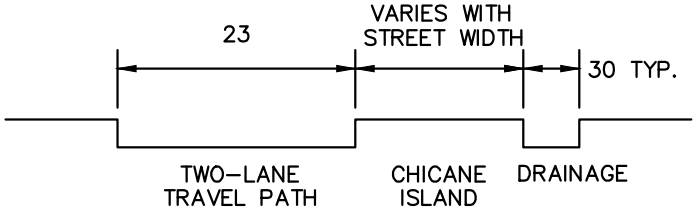


SECTION A–A

NOT TO SCALE

SIGN DESCRIPTIONS:

| | |
|---|---|
| R7–1 | NO PARKING |
| W5–1 | ROADWAY NARROWS |
| WA–36L | HAZARD MARKER LEFT |
| WA–36R | HAZARD MARKER RIGHT |

NOTES

1. THE TRAVEL PATH THROUGH THE CHICANE CAN BE ONE LANE OR TWO LANES AS NOTED.
2. SPACING OF CHICANE SEGMENTS DEPENDENT ON SITE CONSIDERATIONS, E.G. DRIVEWAY LOCATIONS.
3. ISLAND PLANTINGS SHOULD NOT OBSCURE DRIVER'S VIEW OF CHICANE TRAFFIC.
4. ADDITIONAL R7–1 SIGNS MAY BE REQUIRED TO SATISFY LOCAL CONVENTION.

APPROVED BY 12/28/16

MARYSVILLE CITY ENGINEER DATE

# CHICANE

CITY OF Marysville WASHINGTON

STANDARD PLAN 3–525–005

LAST REVISED 12/28/16

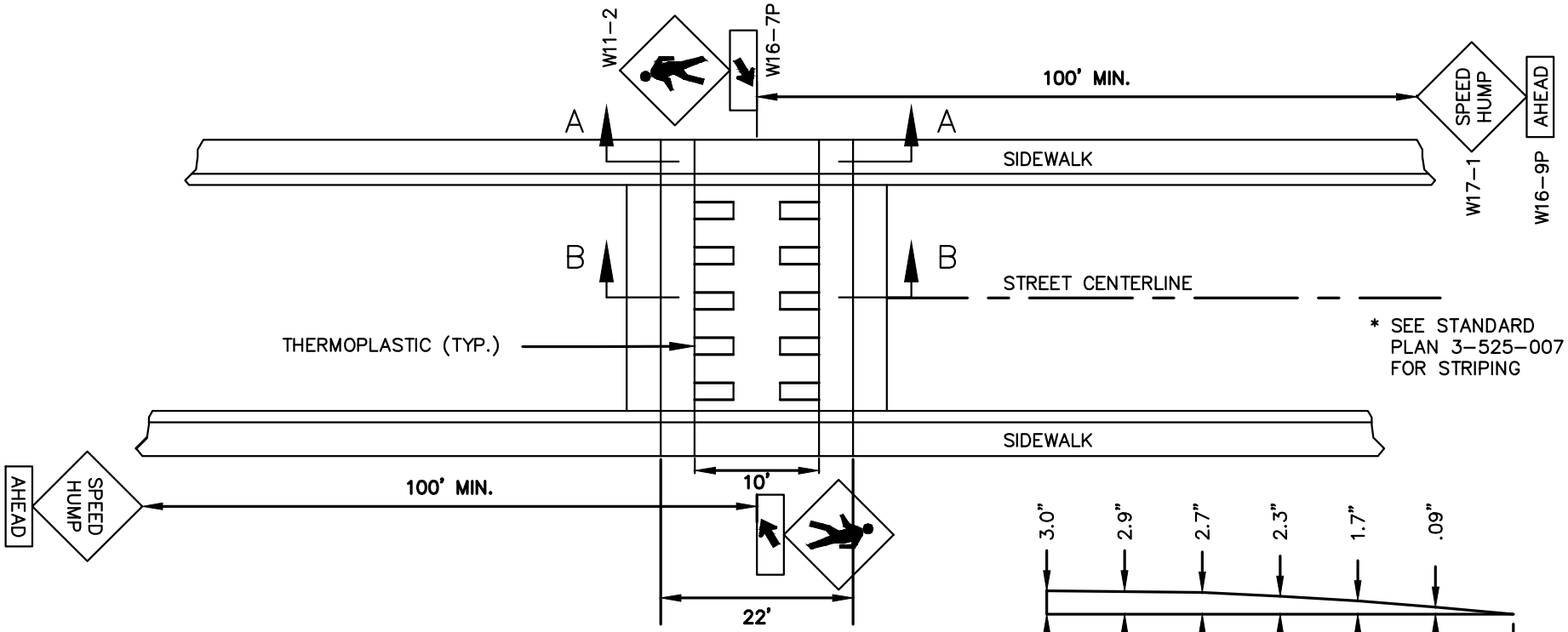


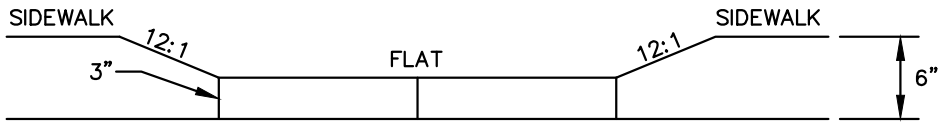


SECTION A–A

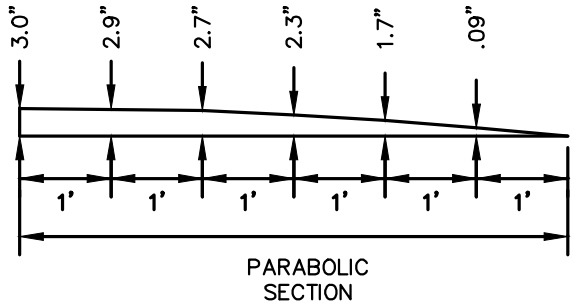


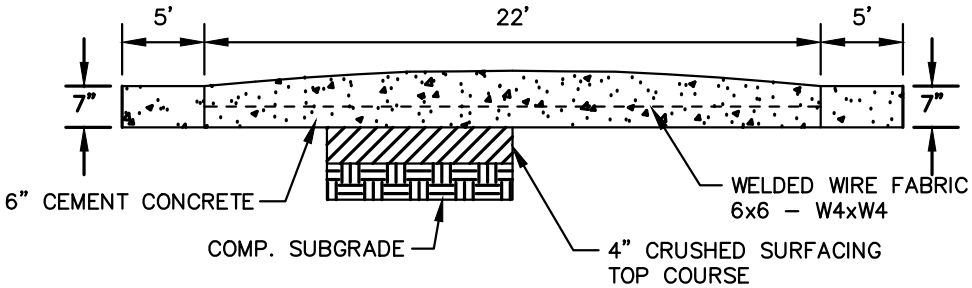


SECTION B–B

N.T.S.

* CROSSWALK SHALL BE SIGNED PER MUTCD MANUAL

APPROVED BY 12/28/16

MARYSVILLE CITY ENGINEER DATE

CITY OF Marysville WASHINGTON

# 22' SPEED TABLE NEIGHBORHOOD COLLECTOR

STANDARD PLAN 3-525-006

LAST REVISED 12/28/16

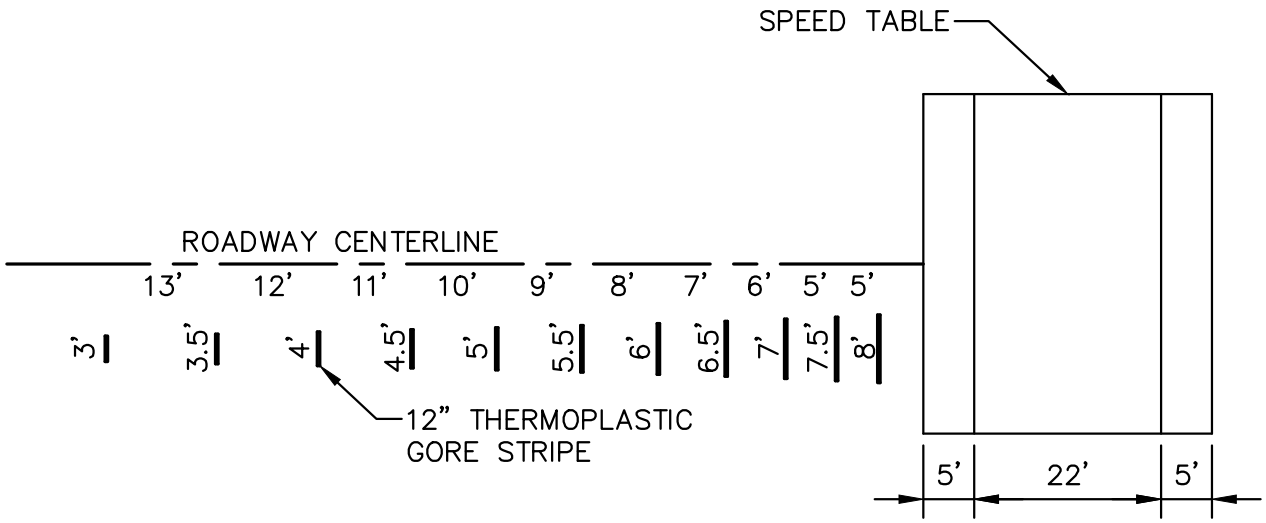


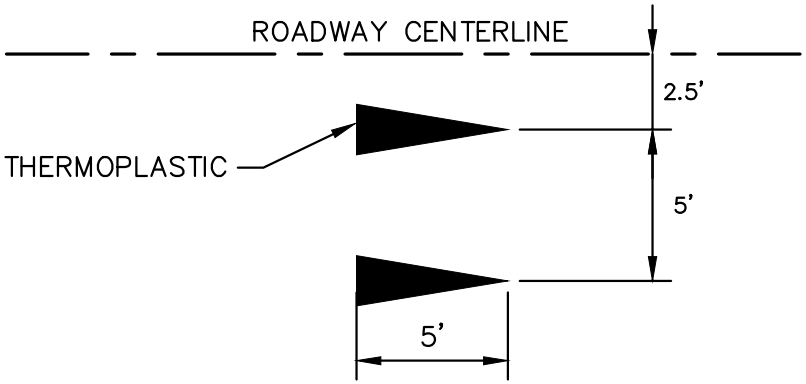


ALTERNATE STRIPE

APPROVED BY 12/28/16

MARYSVILLE CITY ENGINEER DATE

CITY OF Marysville WASHINGTON

# 22' SPEED TABLE STRIPING DETAIL

STANDARD PLAN 3-525-007

LAST REVISED 12/28/16

## SPEED HUMP (TYPICAL)

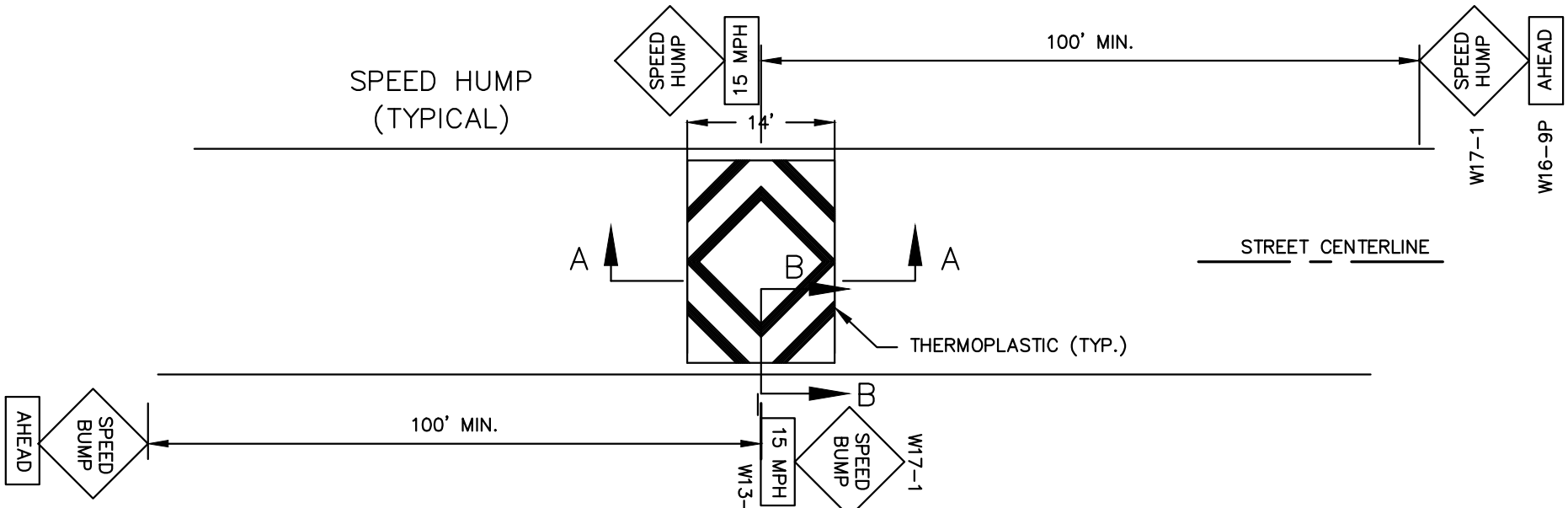


### SECTION A–A

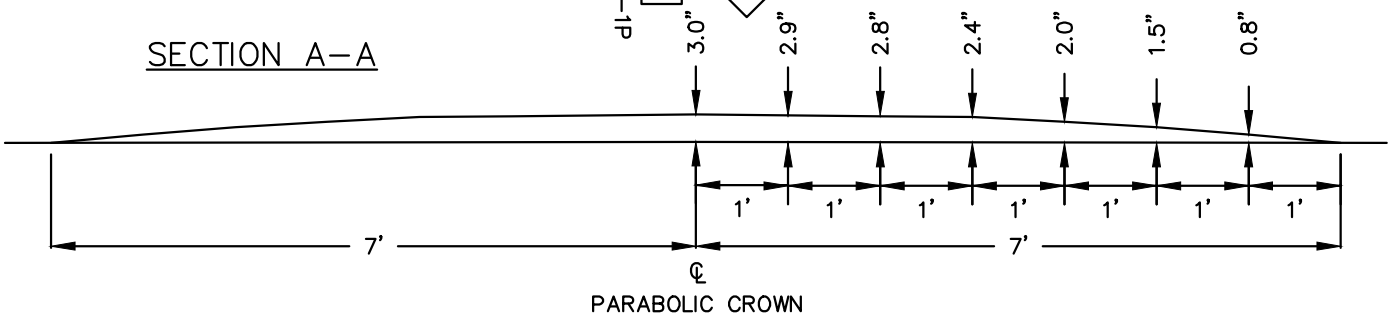


### SECTION B–B

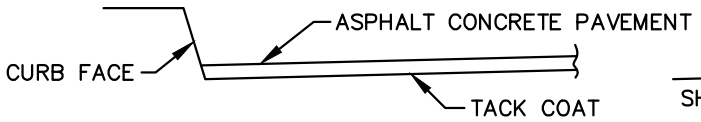


CURB DETAIL

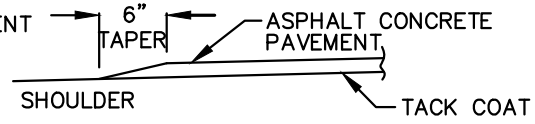


SHOULDER DETAIL FOR STREETS WITHOUT CURBS

NOTE:

1. SPEED HUMPS SHALL BE SPACED A MINIMUM OF 300 FEET CENTER TO CENTER AND A MAXIMUM OF 600 FEET CENTER TO CENTER. 400' SPACING CENTER TO CENTER IS IDEAL.

LAST REVISED 12/28/16

APPROVED BY

MARYSVILLE CITY ENGINEER — DATE 12/28/16

# 14' LOCAL ACCESS SPEED HUMP

CITY OF Marysville WASHINGTON

STANDARD PLAN 3–525–008

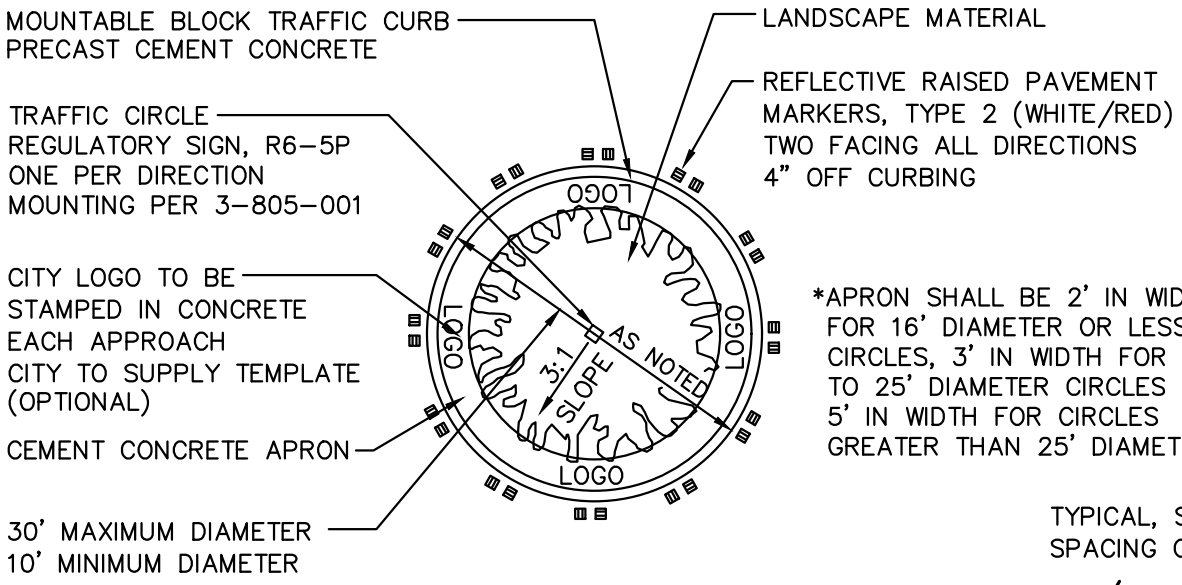


*APRON SHALL BE 2' IN WIDTH FOR 16' DIAMETER OR LESS CIRCLES, 3' IN WIDTH FOR 16' TO 25' DIAMETER CIRCLES AND 5' IN WIDTH FOR CIRCLES GREATER THAN 25' DIAMETER.

TYPICAL TRAFFIC CIRCLE

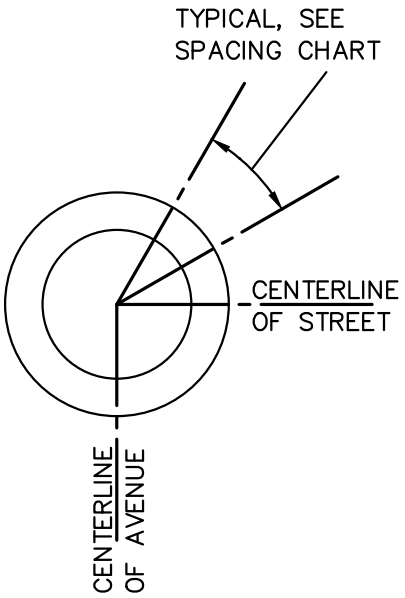


| DIAMETER OF CIRCLE | DEGREE OF SPACING |
|---|---|
| ≤ 12' | EVERY 45° |
| ≤ 20' | EVERY 30° |
| > 20' | EVERY 22 1/2° |

(FACING VEHICLE APPROACH)

TRAFFIC CIRCLE
BI-DIRECTIONAL REFLECTORIVE
PAVEMENT MARKER LAYOUT
(TAPCO #1638-4 OR EQUAL)

MOUNTABLE BLOCK TRAFFIC CURB REQUIREMENTS

- MINIMUM COMPRESSION STRENGTH OF 1600 PSI AT 28 DAYS.
- FREE OF CHIPS, CRACKS, AIR HOLES, HONEYCOMB, ETC.
- SAME COLOR AND SURFACE CHARACTERISTICS.
- BEDDED ENTIRE LENGTH & BREADTH WITH MORTAR MEETING WSDOT SPECIFICATION SECTION 9-20.4(3)
- EXISTING PAVEMENT SHALL BE THOUROUGHLY CLEANED PRIOR APPLICATION OF MORTAR.
- ALL JOINTS EXCEPT THOSE FOR DRAINAGE SHALL BE FILLED WITH MORTAR.
- 1/16" MAXIMUM TOLERANCE ON HEIGHT OF ADJACENT CURB SECTIONS.

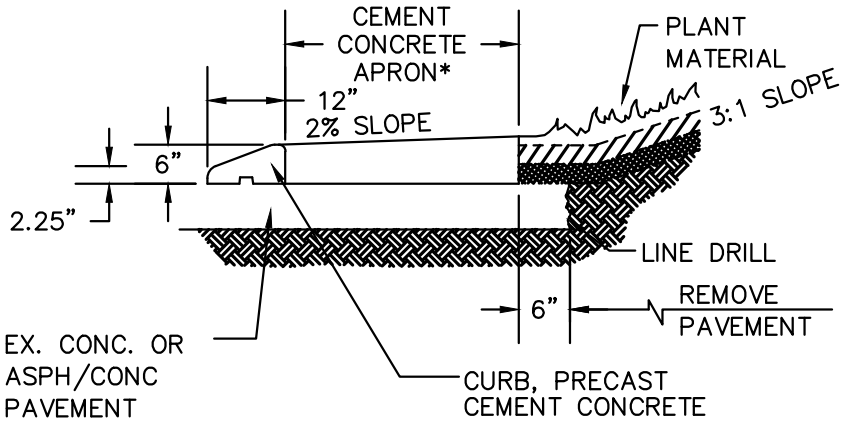


TYPICAL SECTION

LANDSCAPING NOTES:

1. LANDSCAPING PLAN SHALL BE SITE SPECIFIC TO MATCH SURROUNDING ENVIRONMENT.
2. UNDER CERTAIN CONDITIONS, CITY MAY REQUIRE THAT VEGETATION BE REPLACED WITH STAMPED CEMENT CONCRETE.
3. LID DESIGN MAY BE ALLOWED UNDER CERTAIN CONDITIONS AND SPECIAL DESIGN.

LAST REVISED 12/28/16

APPROVED BY 12/28/16

MARYSVILLE CITY ENGINEER DATE

CITY OF Marysville WASHINGTON

# TRAFFIC CIRCLE DETAIL

STANDARD PLAN 3-525-009

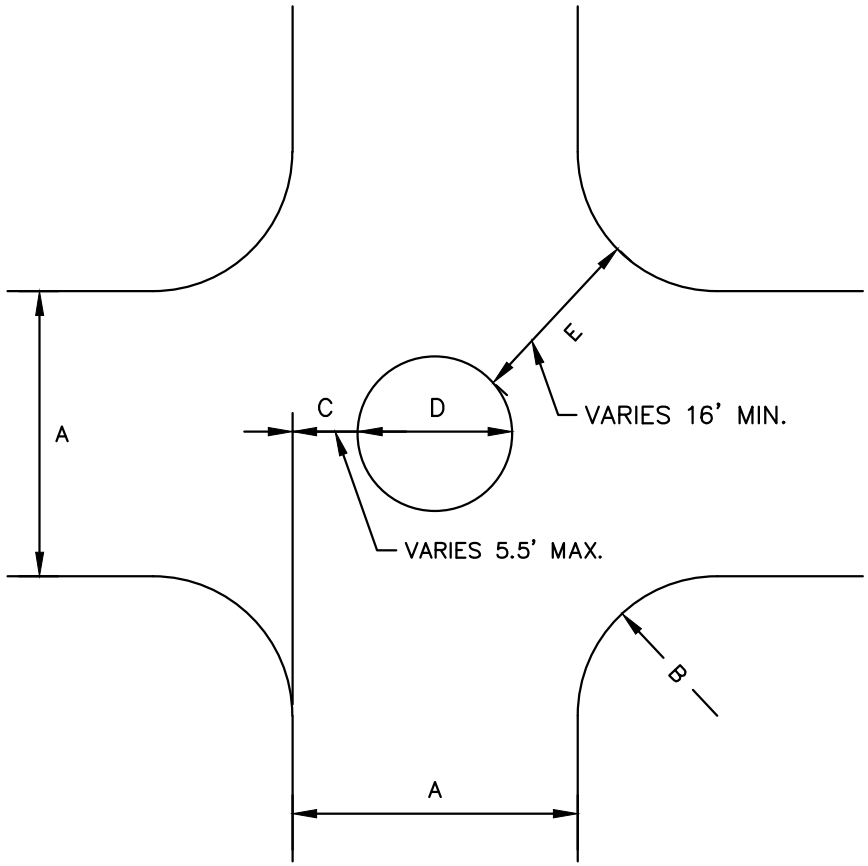


LEGEND:

| | |
|---|---|
| A | STREET WIDTH |
| B | CURB RETURN RADIUS |
| C | OFF-SET DISTANCE |
| D | CIRCLE DIAMETER |
| E | OPENING WIDTH |

OPTIMUM CRITERIA

| OFF-SET DISTANCE | OPENING WIDTH |
|---|---|
| 5.5' MAX | 16' MIN |
| 5.0' | 17'± |
| 4.5' | 18'± |
| 4.0' | 19'± |
| 3.5' OR LESS | 20'± |

APPROVED BY

12/28/16

MARYSVILLE CITY ENGINEER — DATE

CITY OF Marysville WASHINGTON

# INTERSECTION DIAGRAM

STANDARD PLAN 3-525-010

LAST REVISED 12/28/16

| A STREET WIDTH | B CURB RETURN RADIUS | C OFF-SET DISTANCE | D CIRCLE DIAMETER | E OPENING WIDTH |
|---|---|---|---|---|
| 20'* | 15' | RECONSTRUCT CURBS | | |
| | 15' * | 5.5' | 9' | 16'+ |
| | 18' * | 5.0' | 10' | 17'+ |
| | 20' | 4.5' | 11' | 18'– |
| | 25' | 4.0' | 12' | 19'+ |
| 24'* | 12' | RECONSTRUCT CURBS | | |
| | 12' * | 5.5' | 13' | 16' |
| | 15' * | 5.0' | 14' | 17'– |
| | 20' | 4.5' | 15' | 18'+ |
| | 25' | 3.5' | 17' | 20'– |
| 28' | 12' | RECONSTRUCT CURBS | | |
| | 12' * | 5.5' | 14' | 16'+ |
| | 15' * | 5.0' | 15' | 17'– |
| | 18' * | 4.5' | 16' | 18'– |
| | 20' | 4.5' | 16' | 18'+ |
| | 25' | 3.5' | 18' | 20'– |
| 30' | 10' * | 5.5' | 19' | 16'+ |
| | 12' * | 5.0' | 20' | 17'– |
| | 15' * | 5.0' | 20' | 17'+ |
| | 18' * | 4.5' | 21' | 18'+ |
| | 20' | 4.0' | 22' | 19'+ |
| | 25' | 3.0' | 24' | 20' |
| 32' | 10' * | 5.5' | 21' | 16'+ |
| | 12' * | 5.0' | 22' | 17'– |
| | 15' * | 4.5' | 23' | 18'– |
| | 18' * | 4.0' | 24' | 19'– |
| | 20' | 4.0' | 24' | 19'+ |
| | 25' | 2.5' | 27' | 20' |
| 36' | 10' * | 5.0' | 26' | 17'– |
| | 12' * | 5.0' | 26' | 17'+ |
| | 15' * | 4.5' | 27' | 18'+ |
| | 18' * | 4.0' | 28' | 19'+ |
| | 20' | 3.5' | 29' | 20'– |
| | 25' | 1.5' | 33' | 20' |
| 40' | 10' * | 5.0' | 30' | 17'+ |
| | 12' * | 4.5' | 31' | 18'+ |
| | 15' * | 4.0' | 32' | 19'– |
| | 18' * | 3.5' | 33' | 20'– |
| | 20' | 3.0' | 34' | 20' |
| | 25' | 1.0' | 38' | 20' |

* EXISTING SUBSTANDARD WIDTH STREETS

LAST REVISED 12/28/16

APPROVED BY 12/28/16

MARYSVILLE CITY ENGINEER DATE

# DIMENSION CHART

CITY OF Marysville WASHINGTON

STANDARD PLAN 3-525-011

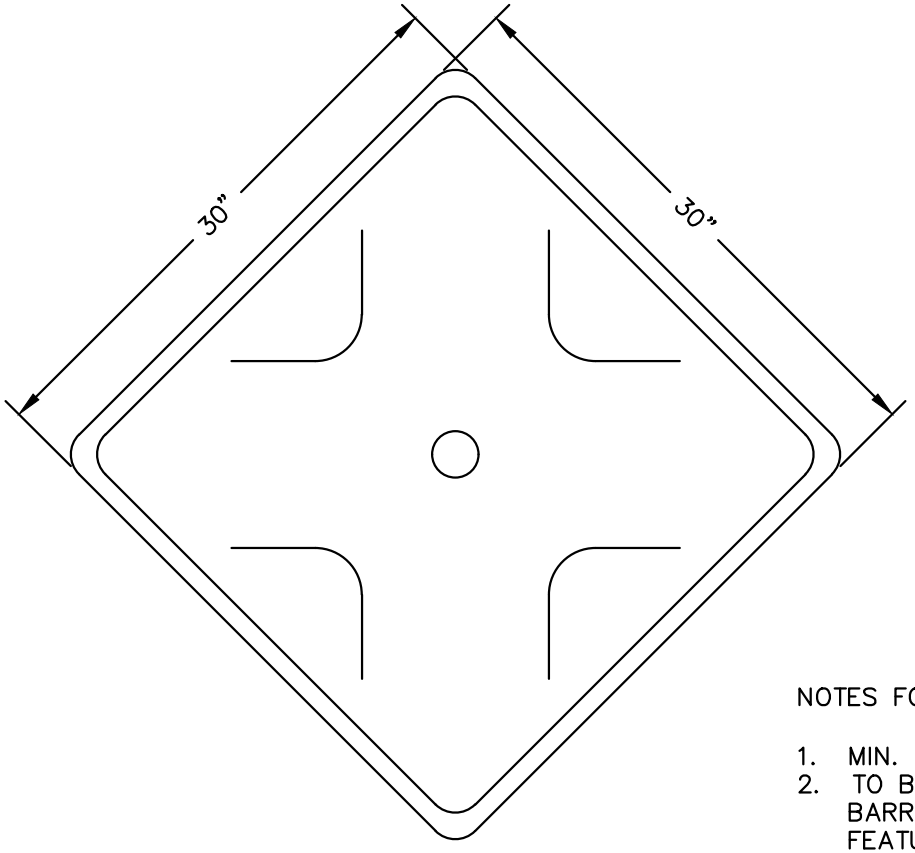


# OM1-2 & OM4-1

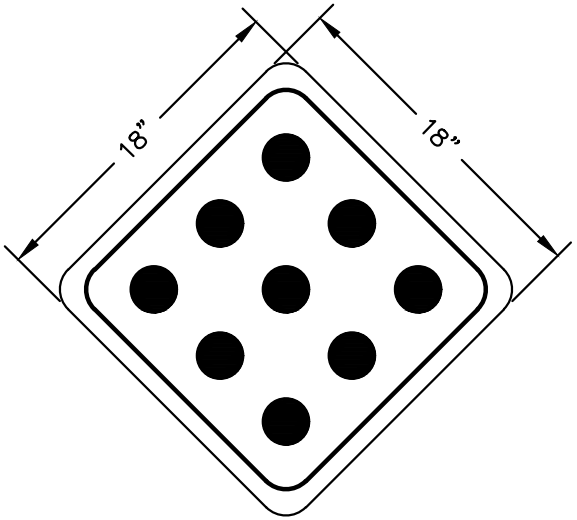


NOTES FOR OM1-2:

1. MIN. MOUNTING HEIGHT = 48"
2. TO BE USED ON ALL TYPE III BARRICADES INDICATING A FEATURE ADJACENT TO THE ROADWAY.

NOTES FOR OM4-1:

1. MIN. MOUNTING HEIGHT = 48"
2. TO BE USED ON ALL TYPE III BARRICADES OR AS STAND-ALONE INSTALLATION INDICATING ROADWAY END.

APPROVED BY

12/28/16

MARYSVILLE CITY ENGINEER DATE

## WARNING SIGNS

CITY OF Marysville WASHINGTON

STANDARD PLAN 3-525-012

LAST REVISED 12/28/16

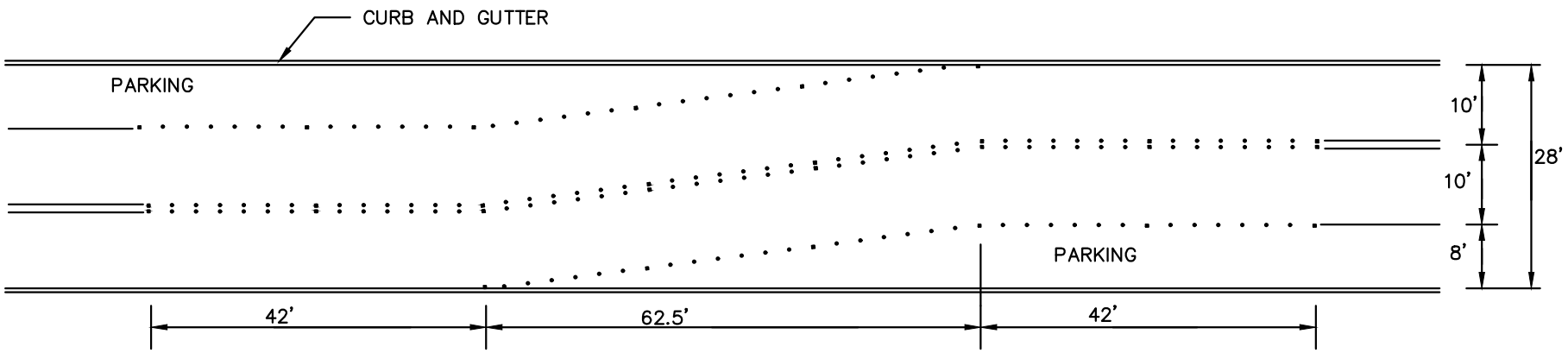


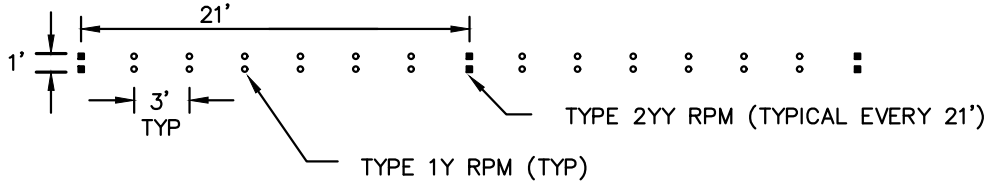


CENTER OF TRAVEL WAY

NOTES:

1. ALTERNATE PARKING EVERY 300' +OR–.
2. DIMENSIONS ARE FOR POSTED SPEED OF 25 MPH.

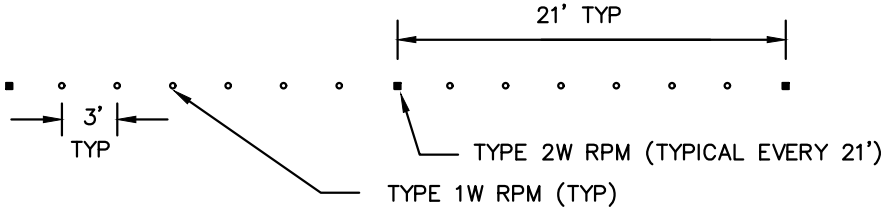


EDGE OF TRAVEL WAY

APPROVED BY 12/28/16

MARYSVILLE CITY ENGINEER DATE

CITY OF Marysville WASHINGTON

ALTERNATE PARKING CHANNELIZATION

STANDARD PLAN 3–525–013

LAST REVISED 12/28/16

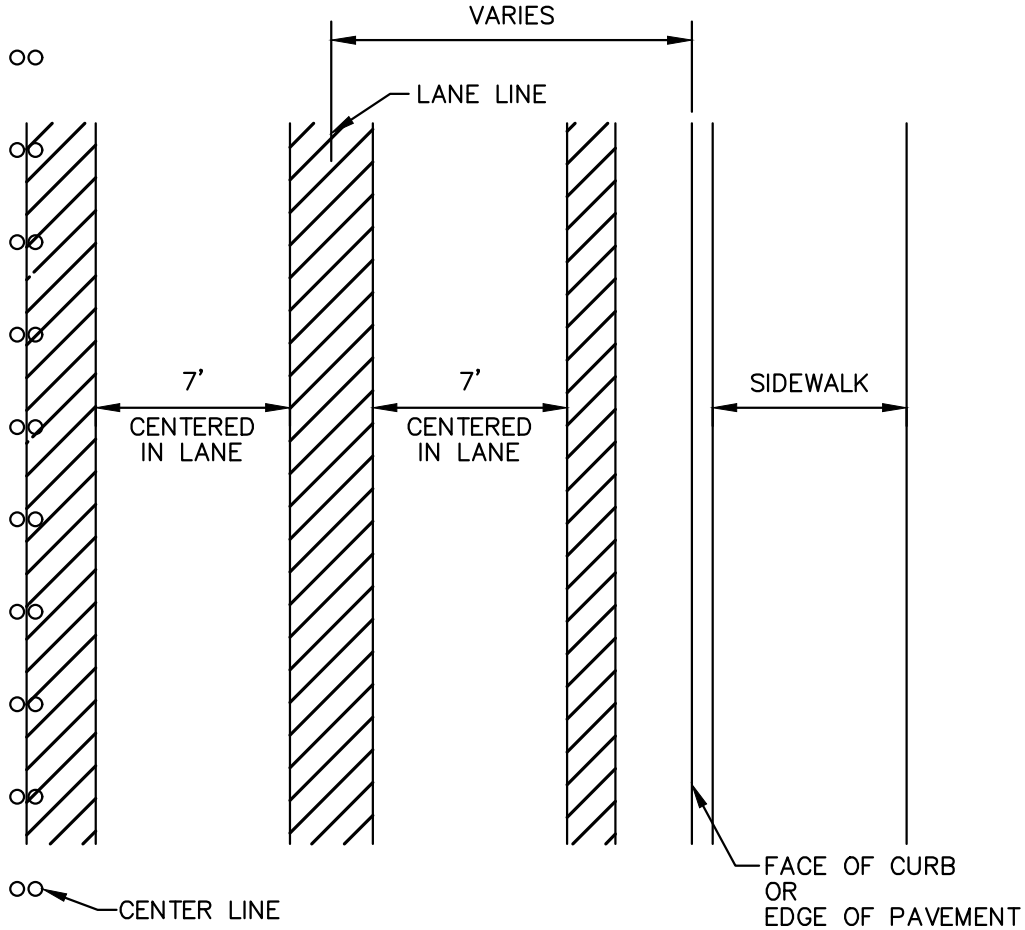


NOTES:

1. IF THE TRENCH FOR LONGITUDINAL WORK OCCURS WITHIN THE HATCHED AREA, AN OVERLAY WILL BE REQUIRED.

APPROVED BY 12/28/16

MARYSVILLE CITY ENGINEER DATE

CITY OF Marysville WASHINGTON

**TRENCH LOCATION WITHIN ROADWAY**

STANDARD PLAN 3-703-001

LAST REVISED 12/28/16

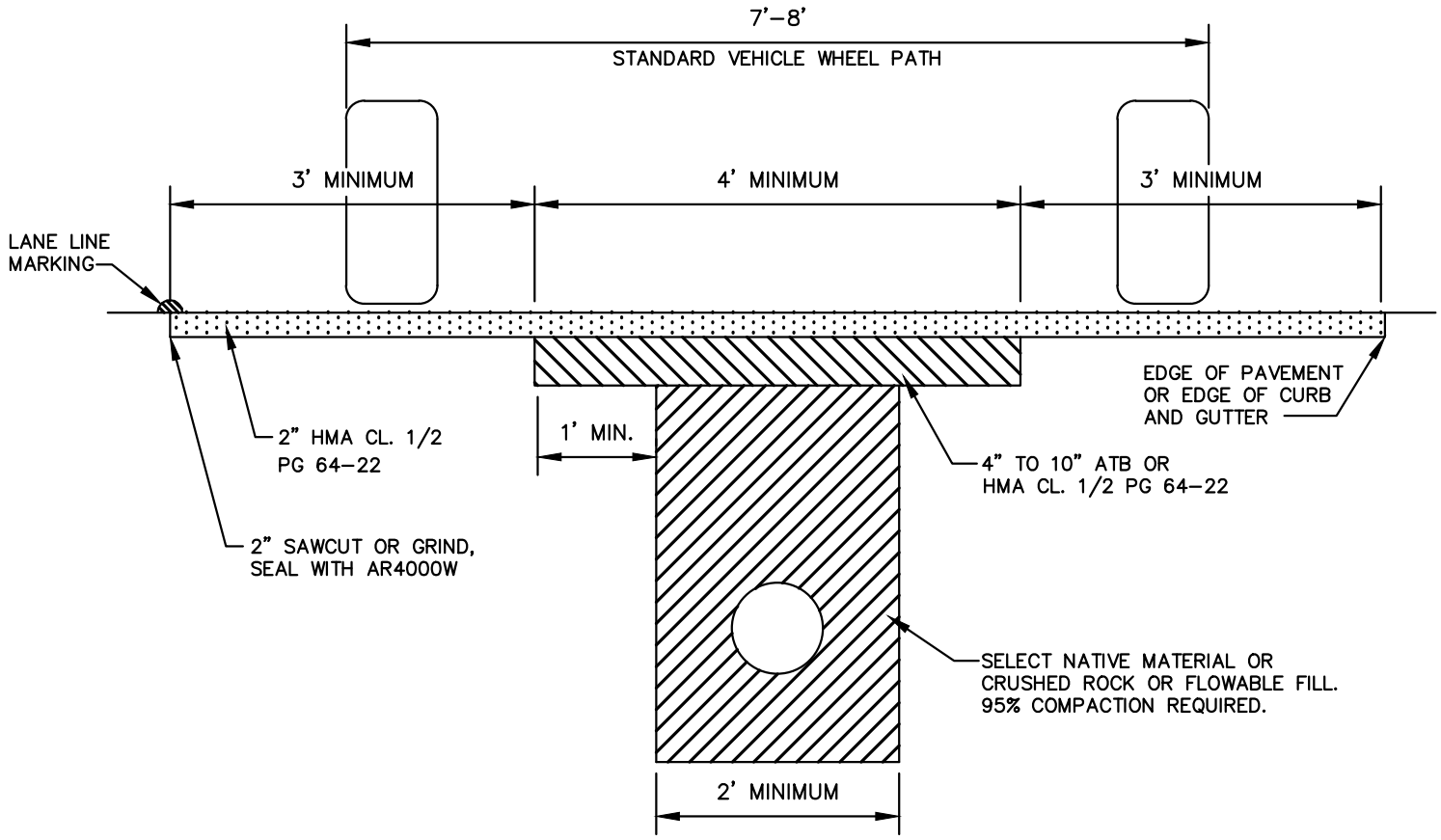


# LESS THAN FULL WIDTH OVERLAY

APPROVED BY

12/28/16

MARYSVILLE CITY ENGINEER DATE

**SECTION OF LONGITUDINAL OR TRANSVERSE CUT**

CITY OF Marysville WASHINGTON

STANDARD PLAN 3–703–002

LAST REVISED 12/28/16

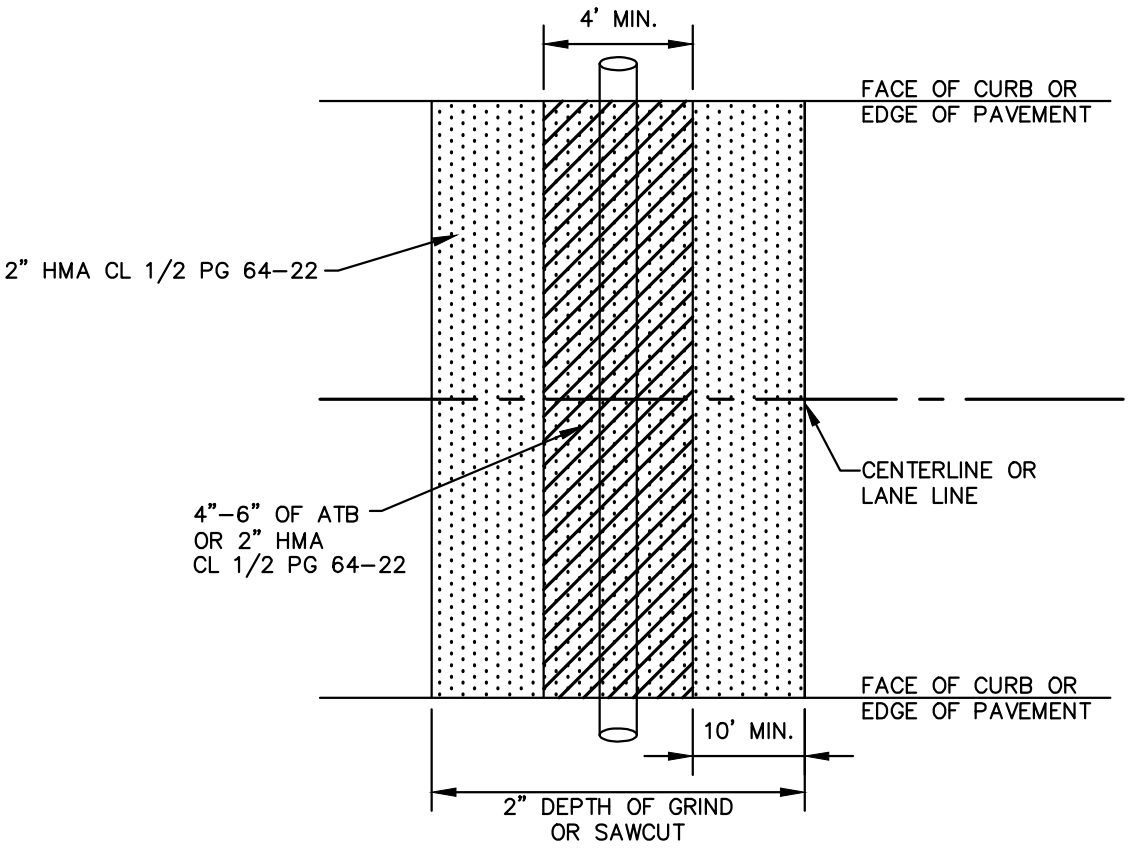


## OVERHEAD VIEW

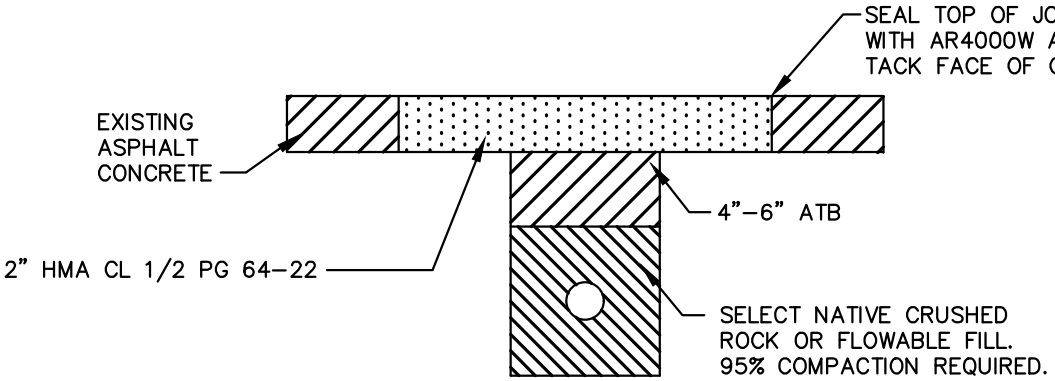


## CROSS SECTION

APPROVED BY

12/28/16

MARYSVILLE CITY ENGINEER DATE

# TRANSVERSE CUT

CITY OF Marysville WASHINGTON

STANDARD PLAN 3-703-003

LAST REVISED 12/28/16

NOTE: STOP SIGN SHOWN FOR REFERENCE ONLY. STANDARD APPLIES TO ALL MUTCD COMPLIANT SIGNS WITHIN ROW.

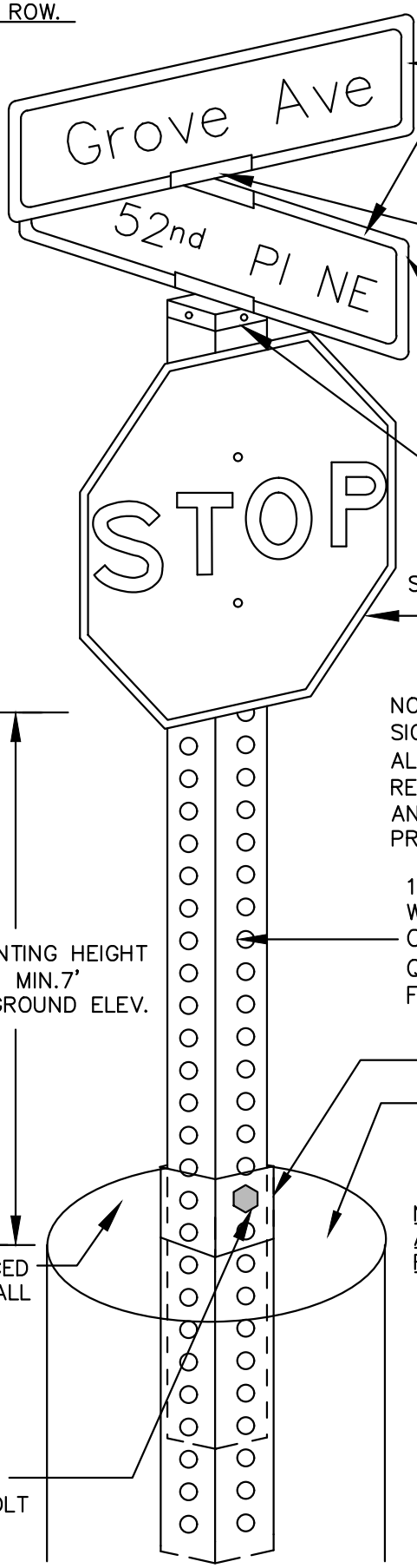


STREET NAME SIGN FONT – HIGHWAY SERIES B

STREET NAME SIGNS – MIN LETTER HEIGHT

| ROADWAY TYPE | UPPERCASE | LOWERCASE |
|---|---|---|
| MULTI–LANE > 40 MPH | 8" | 6" |
| MULTI–LANE < 40 MPH | 6" | 4.5" |
| 2–LANE | 6" | 4.5" |

808 EX BRACKET

FLAT DOUBLE FACE WITH ROUNDED CORNERS AND 1/2" WHITE BORDER.
MIN LENGTH = 30"
MAX LENGTH = 48"

850 BRACKET, 5 1/4 LONG

SIGN W/ STREET NAME SIGNS, 4" BELOW TOP OF POST
W/O STREET NAME SIGNS, FLUSH W/ TOP OF POST
FASTENED WITH 2 3/8" ALUMINUM DRIVE RIVETS.

NOTE: REGULATORY SIGNS, WARNING SIGNS AND GUIDE SIGNS MEET MUTCD SPECIFICATION GUIDELINES. ALL SIGNS SHALL HAVE ASTM D4956–01 TYPE IV RETROREFLECTIVE SHEETING. ALL SIGNS SHALL HAVE ANTI–GRAFFITI SIGN COATING CONSISTING OF 3M–1160 PREMIUM PROTECTIVE OVERLAY FILM OR EQUAL.

MOUNTING HEIGHT
MIN.7'
TO GROUND ELEV.

14 GAGE 2X2 HOT DIP GALVANIZED ASTM A653 WITH 12" MIN. PENETRATION INTO ANCHOR. COATING DESIGNATION G–140. 7/16" DIA QUICK PUNCH HOLES ON 1" CENTERS ON ALL FOUR SIDES WITH TRUE ALIGNMENT.

30" – 12 GAGE 2.25X2.25 ANCHOR
MIN. 2 HOLES/MAX. 4 HOLES ABOVE THE GROUND

IF SIGN TO BE PLACED IN SIDEWALK AREA, 12" MIN. PVC CONDUIT SLEEVE MUST BE PLACED WITHIN SIDEWALK. BACKFILL SHALL BE ⅝"– GRAVEL.

NOTE: CONCRETE SHALL NOT BE UTILIZED FOR SIGN ANCHORS. SIGNS INSTALLED WITH CONCRETE SHALL BE REMOVED AND PLACED PER STANDARD PLAN & SPEC.

SIGNS PLACED IN SOIL SHALL BE BACKFILLED AND COMPACTED WITH ⅝"– GRAVEL.

UM–SQCBL CORNER BOLT THRU 2.5" TUBE

APPROVED BY

12/27/17

MARYSVILLE CITY ENGINEER — DATE

CITY OF Marysville WASHINGTON

**POST MOUNTING DETAIL FOR ALL STREET SIGNS WITHIN ROW**

LAST REVISED 12/27/17

STANDARD PLAN 3–805–001